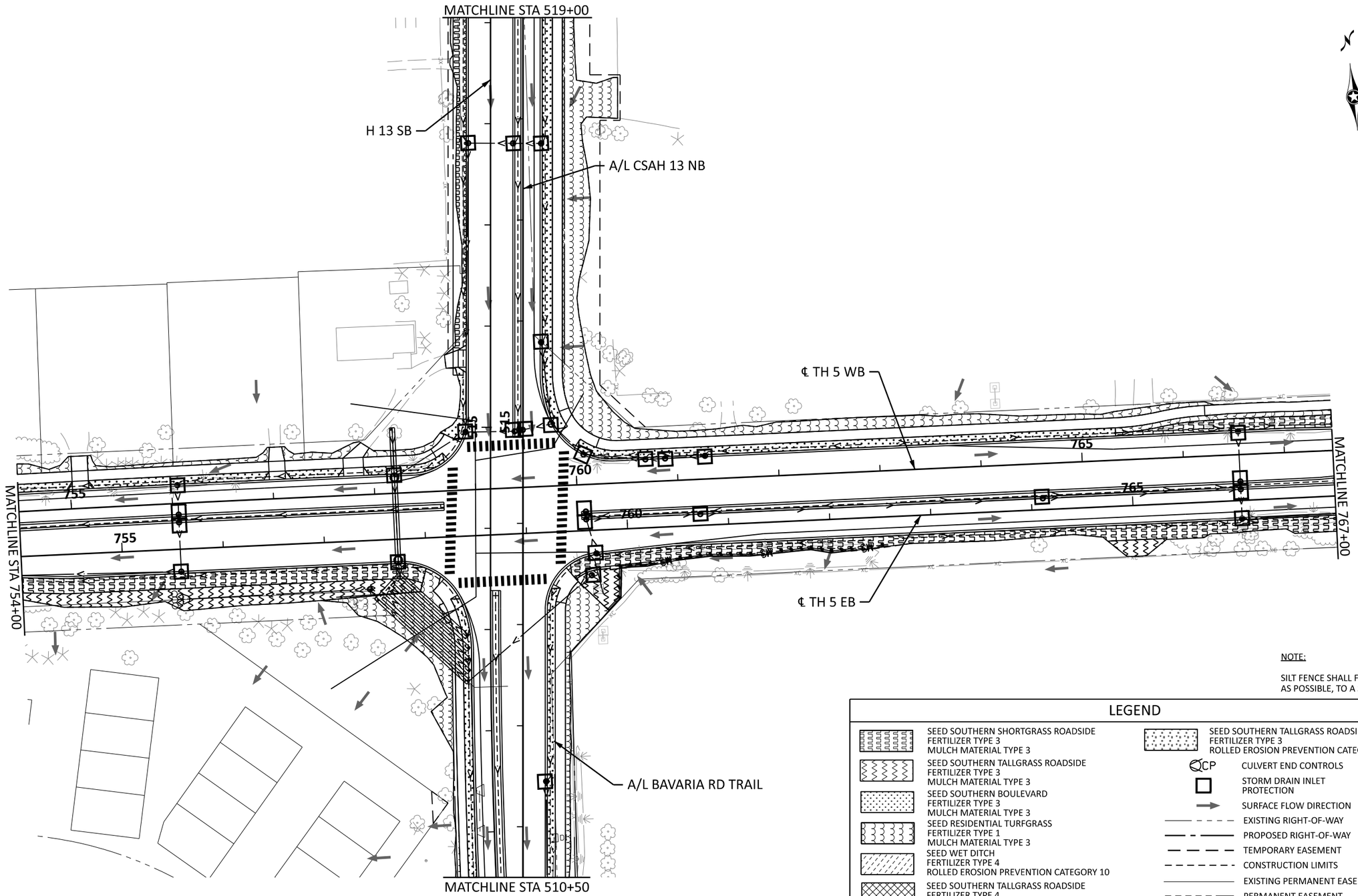

NOTE:

SILT FENCE SHALL FOLLOW, AS CLOSE AS POSSIBLE, TO A SINGLE CONTOUR.

LEGEND

- SEED SOUTHERN SHORTGRASS ROADSIDE FERTILIZER TYPE 3 MULCH MATERIAL TYPE 3
- SEED SOUTHERN TALLGRASS ROADSIDE FERTILIZER TYPE 3 MULCH MATERIAL TYPE 3
- SEED SOUTHERN BOULEVARD FERTILIZER TYPE 3 MULCH MATERIAL TYPE 3
- SEED RESIDENTIAL TURFGRASS FERTILIZER TYPE 1 MULCH MATERIAL TYPE 3
- SEED WET DITCH FERTILIZER TYPE 4 ROLLED EROSION PREVENTION CATEGORY 10
- SEED SOUTHERN TALLGRASS ROADSIDE FERTILIZER TYPE 4 ROLLED EROSION PREVENTION CATEGORY 25
- SEED SOUTHERN SHORTGRASS ROADSIDE FERTILIZER TYPE 3 ROLLED EROSION PREVENTION CATEGORY 25
- SEE LANDSCAPING PLANS
- SEED SOUTHERN TALLGRASS ROADSIDE FERTILIZER TYPE 3 ROLLED EROSION PREVENTION CATEGORY 10
- CP CULVERT END CONTROLS
- STORM DRAIN INLET PROTECTION
- SURFACE FLOW DIRECTION
- EXISTING RIGHT-OF-WAY
- PROPOSED RIGHT-OF-WAY
- TEMPORARY EASEMENT
- CONSTRUCTION LIMITS
- EXISTING PERMANENT EASEMENT
- PERMANENT EASEMENT
- PARCEL LINE
- MS SILT FENCE (MACHINE SLICED)
- BR SEDIMENT CONTROL LOG (SCL) TYPE WOOD FIBER
- AREA OF ENVIRONMENTAL SENSITIVITY

0 50 100
SCALE FEET

BOLTON & MENK
12224 NICOLLET AVENUE
BURNSVILLE, MINNESOTA 55337
Phone: (952) 890-0509
Email: Burnsville@bolton-menk.com
www.bolton-menk.com

REV.	BY	DATE

I HEREBY CERTIFY THAT THIS PLAN, SPECIFICATION, OR REPORT WAS PREPARED BY ME OR UNDER MY DIRECT SUPERVISION AND THAT I AM A DULY LICENSED PROFESSIONAL ENGINEER UNDER THE LAWS OF THE STATE OF MINNESOTA.

JOHN L. PERKINS
LIC. NO. 56278 DATE 03/14/2025

DESIGNED MMH
DRAWN MMH
CHECKED JLP

S.P. 1002-124, S.P. 1008-113, S.P. 010-596-014, S.P. 010-596-016, S.P. 010-613-009, S.P. 241-020-003, S.P. 241-090-001

TH 5 RECONSTRUCTION

EROSION CONTROL & TURF ESTABLISHMENT PLANS

John.Perkins 5/6/2025 pdf-B and W.pltcfg 8:40:02 PM 0T4M00197_pen.tbl H:\CACO\0T4M00197\CAD\ORD\CACO-0T4M00197\plans\Turf\cd1002124_325tep006.dgn
Default

LEGEND

- SEED SOUTHERN SHORTGRASS ROADSIDE
  FERTILIZER TYPE 3
  MULCH MATERIAL TYPE 3
- SEED SOUTHERN TALLGRASS ROADSIDE
  FERTILIZER TYPE 3
  MULCH MATERIAL TYPE 3
- SEED SOUTHERN BOULEVARD
  FERTILIZER TYPE 3
  MULCH MATERIAL TYPE 3
- SEED RESIDENTIAL TURFGRASS
  FERTILIZER TYPE 1
  MULCH MATERIAL TYPE 3
- SEED WET DITCH
  FERTILIZER TYPE 4
  ROLLED EROSION PREVENTION CATEGORY 10
- SEED SOUTHERN TALLGRASS ROADSIDE
  FERTILIZER TYPE 4
  ROLLED EROSION PREVENTION CATEGORY 25
- SEED SOUTHERN SHORTGRASS ROADSIDE
  FERTILIZER TYPE 3
  ROLLED EROSION PREVENTION CATEGORY 25
- SEE LANDSCAPING PLANS
- SEED SOUTHERN TALLGRASS ROADSIDE
  FERTILIZER TYPE 3
  ROLLED EROSION PREVENTION CATEGORY 10
- CP — CULVERT END CONTROLS
- STORM DRAIN INLET PROTECTION
- SURFACE FLOW DIRECTION
- EXISTING RIGHT-OF-WAY
- PROPOSED RIGHT-OF-WAY
- TEMPORARY EASEMENT
- CONSTRUCTION LIMITS
- EXISTING PERMANENT EASEMENT
- PERMANENT EASEMENT
- PARCEL LINE
- MS — SILT FENCE (MACHINE SLICED)
- BR — SEDIMENT CONTROL LOG (SCL) TYPE WOOD FIBER
- AREA OF ENVIRONMENTAL SENSITIVITY

NOTE:

SILT FENCE SHALL FOLLOW, AS CLOSE AS POSSIBLE, TO A SINGLE CONTOUR.

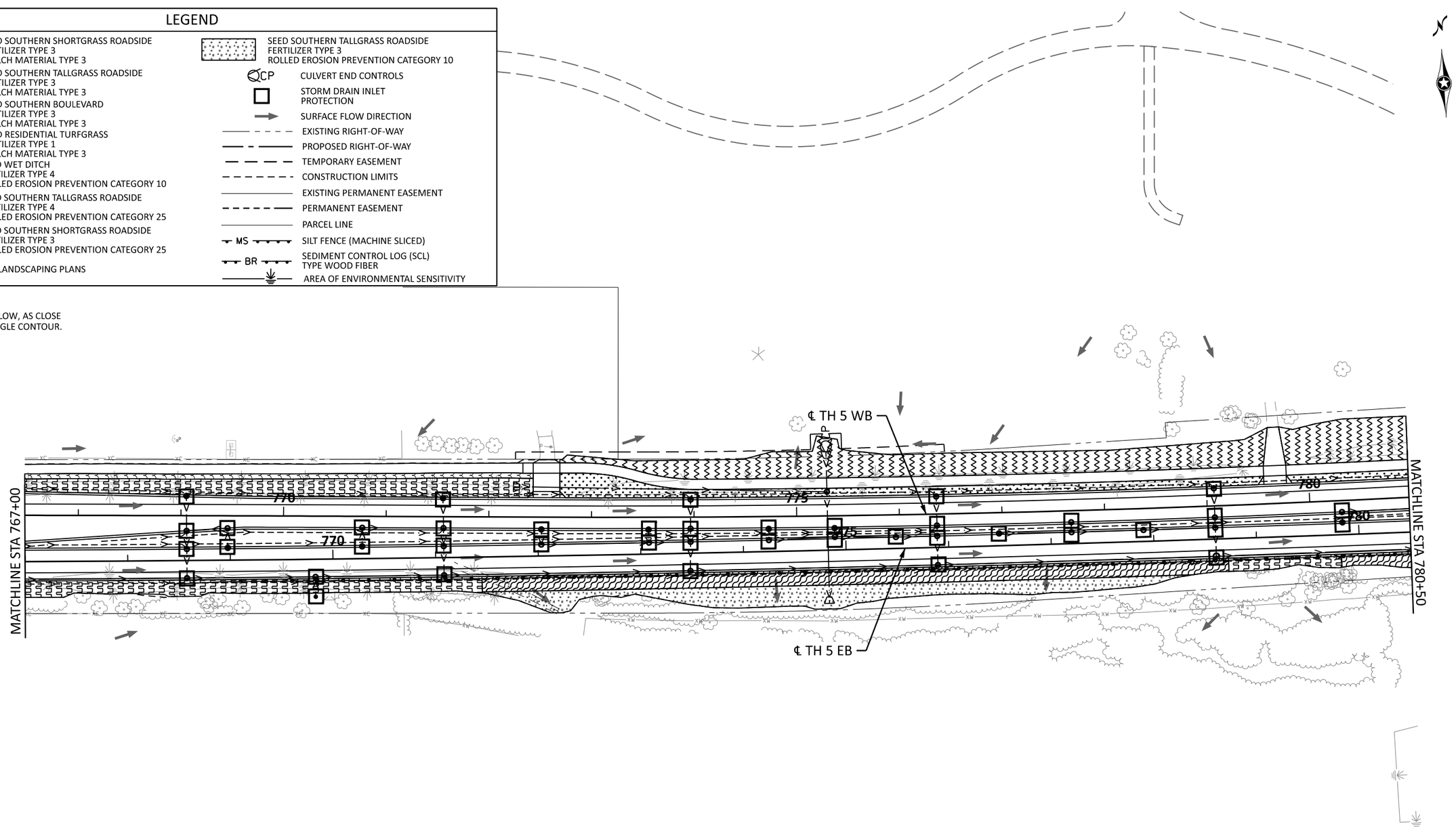

0 50 100
SCALE FEET

Default

BOLTON & MENK
12224 NICOLLET AVENUE
BURNSVILLE, MINNESOTA 55337
Phone: (952) 890-0509
Email: Burnsville@bolton-menk.com
www.bolton-menk.com

REV.	BY	DATE

I HEREBY CERTIFY THAT THIS PLAN, SPECIFICATION, OR REPORT WAS PREPARED BY ME OR UNDER MY DIRECT SUPERVISION AND THAT I AM A DULY LICENSED PROFESSIONAL ENGINEER UNDER THE LAWS OF THE STATE OF MINNESOTA.

JOHN L. PERKINS
LIC. NO. 56278 DATE 03/14/2025

DESIGNED MMH
DRAWN MMH
CHECKED JLP

S.P. 1002-124, S.P. 1008-113, S.P. 010-596-014, S.P. 010-596-016, S.P. 010-613-009, S.P. 241-020-003, S.P. 241-090-001

TH 5 RECONSTRUCTION

EROSION CONTROL & TURF ESTABLISHMENT PLANS

John.Perkins 5/6/2025
pdf-B and W.pltcfg 8:40:03 PM
0T4M00197_pen.tbl
H:\CACO\0T4M00197\CAD\ORD\CACO-0T4M00197\plans\Turf\cd1002124_325tep007.dgn

NOTE:

SILT FENCE SHALL FOLLOW, AS CLOSE AS POSSIBLE, TO A SINGLE CONTOUR.

LEGEND

- SEED SOUTHERN SHORTGRASS ROADSIDE FERTILIZER TYPE 3 MULCH MATERIAL TYPE 3
- SEED SOUTHERN TALLGRASS ROADSIDE FERTILIZER TYPE 3 MULCH MATERIAL TYPE 3
- SEED SOUTHERN BOULEVARD FERTILIZER TYPE 3 MULCH MATERIAL TYPE 3
- SEED RESIDENTIAL TURFGRASS FERTILIZER TYPE 1 MULCH MATERIAL TYPE 3
- SEED WET DITCH FERTILIZER TYPE 4 ROLLED EROSION PREVENTION CATEGORY 10
- SEED SOUTHERN TALLGRASS ROADSIDE FERTILIZER TYPE 4 ROLLED EROSION PREVENTION CATEGORY 25
- SEED SOUTHERN SHORTGRASS ROADSIDE FERTILIZER TYPE 3 ROLLED EROSION PREVENTION CATEGORY 25
- SEE LANDSCAPING PLANS
- SEED SOUTHERN TALLGRASS ROADSIDE FERTILIZER TYPE 3 ROLLED EROSION PREVENTION CATEGORY 10
- CP — CULVERT END CONTROLS
- STORM DRAIN INLET PROTECTION
- SURFACE FLOW DIRECTION
- EXISTING RIGHT-OF-WAY
- PROPOSED RIGHT-OF-WAY
- TEMPORARY EASEMENT
- CONSTRUCTION LIMITS
- EXISTING PERMANENT EASEMENT
- PERMANENT EASEMENT
- PARCEL LINE
- MS — SILT FENCE (MACHINE SLICED)
- BR — SEDIMENT CONTROL LOG (SCL) TYPE WOOD FIBER
- AREA OF ENVIRONMENTAL SENSITIVITY

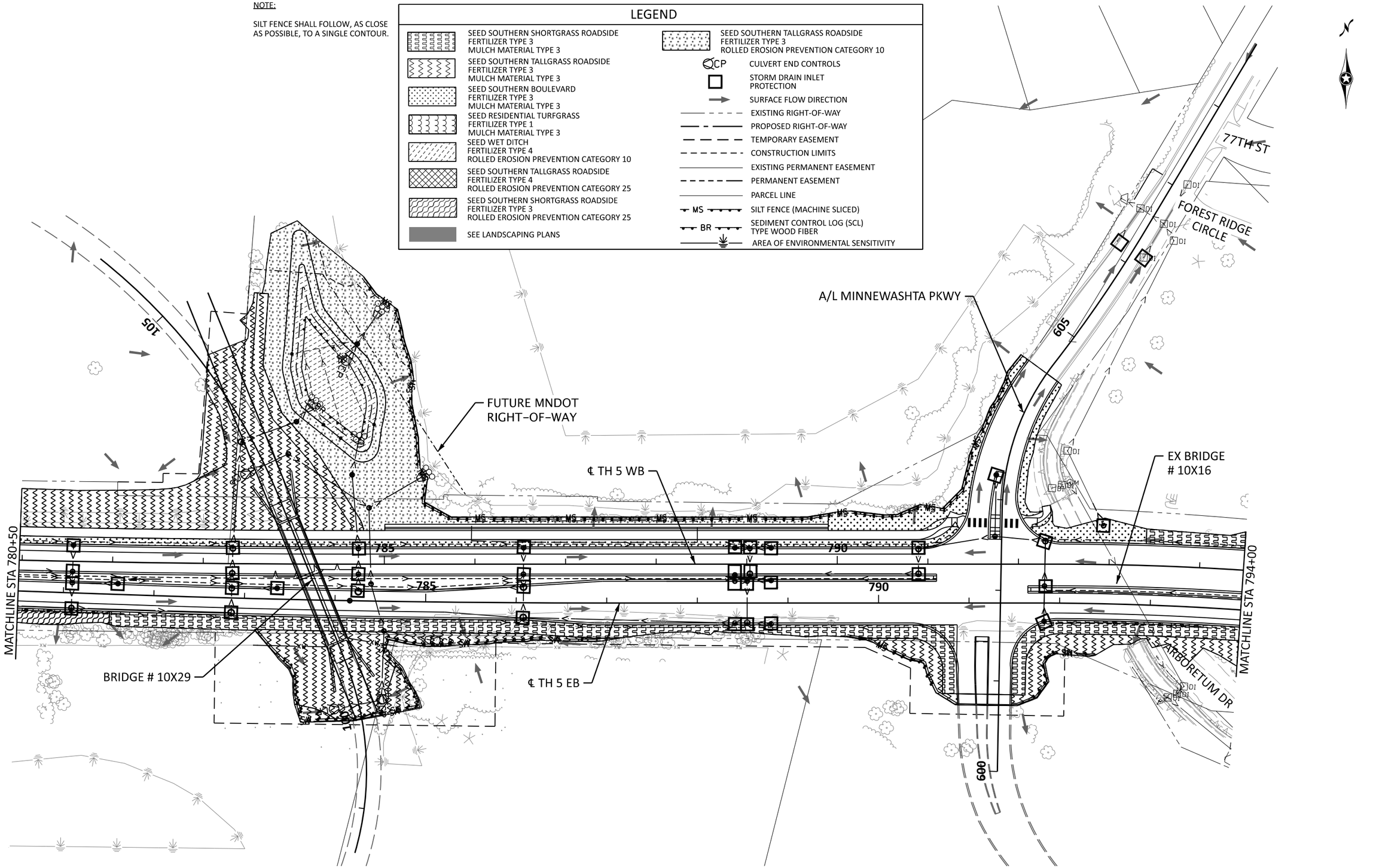

0 50 100
SCALE FEET

BOLTON & MENK
12224 NICOLLET AVENUE
BURNSVILLE, MINNESOTA 55337
Phone: (952) 890-0509
Email: Burnsville@bolton-menk.com
www.bolton-menk.com

REV.	BY	DATE

I HEREBY CERTIFY THAT THIS PLAN, SPECIFICATION, OR REPORT WAS PREPARED BY ME OR UNDER MY DIRECT SUPERVISION AND THAT I AM A DULY LICENSED PROFESSIONAL ENGINEER UNDER THE LAWS OF THE STATE OF MINNESOTA.

JOHN L. PERKINS
LIC. NO. 56278 DATE 03/14/2025

DESIGNED MMH
DRAWN MMH
CHECKED JLP

S.P. 1002-124, S.P. 1008-113, S.P. 010-596-014, S.P. 010-596-016, S.P. 010-613-009, S.P. 241-020-003, S.P. 241-090-001

TH 5 RECONSTRUCTION

EROSION CONTROL & TURF ESTABLISHMENT PLANS

SHEET 544 OF 729

John.Perkins 5/6/2025
pdf-B and W.pltcfg 8:40:04 PM
0T4M00197_pen.tbl
H:\CACO\0T4M00197\CAD\ORD\CACO-0T4M00197\plans\Turfcd1002124_325tep008.dgn
Default

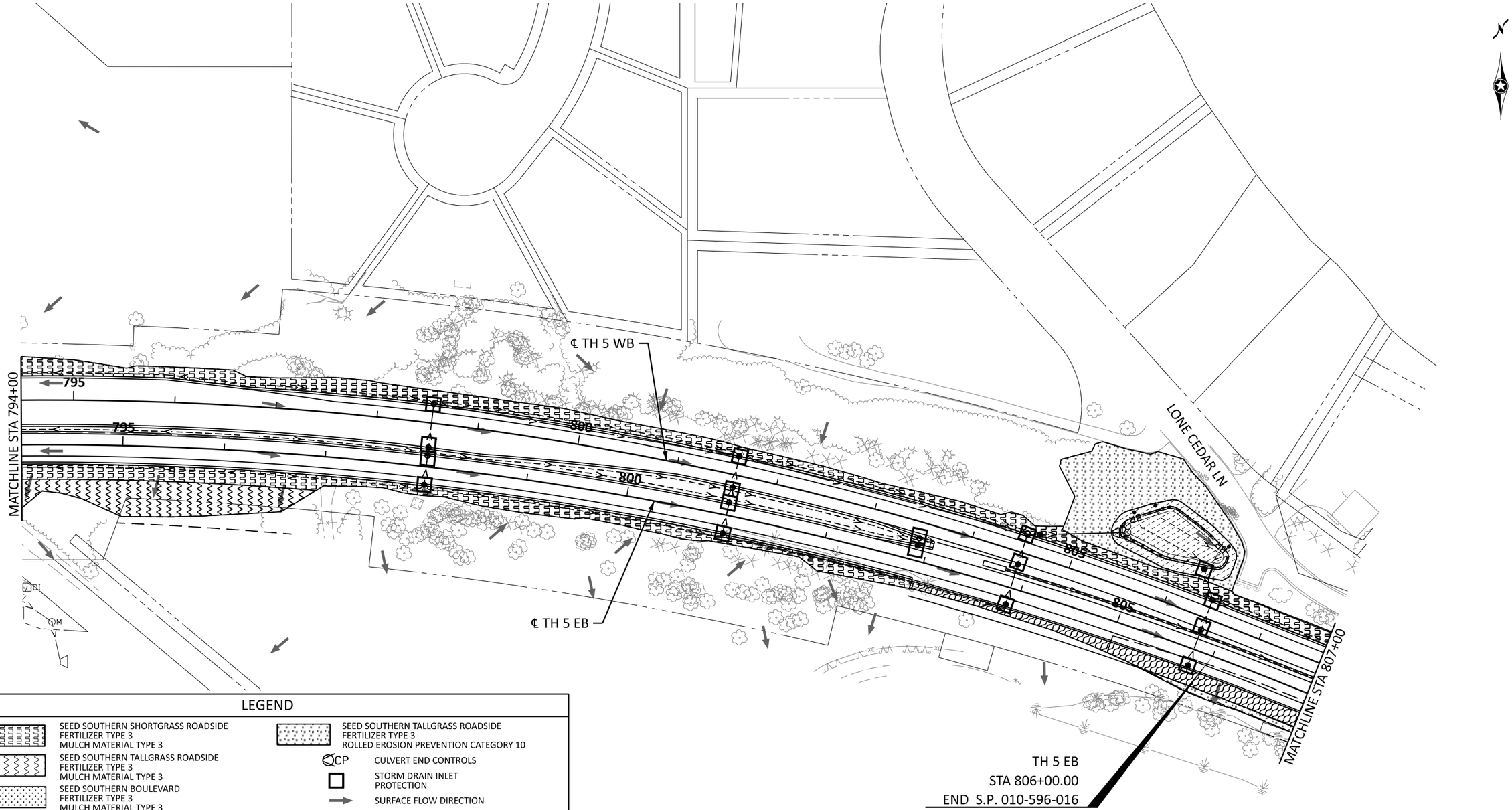

LEGEND

- SEED SOUTHERN SHORTGRASS ROADSIDE FERTILIZER TYPE 3 MULCH MATERIAL TYPE 3
- SEED SOUTHERN TALLGRASS ROADSIDE FERTILIZER TYPE 3 MULCH MATERIAL TYPE 3
- SEED SOUTHERN BOULEVARD FERTILIZER TYPE 3 MULCH MATERIAL TYPE 3
- SEED RESIDENTIAL TURFGRASS FERTILIZER TYPE 1 MULCH MATERIAL TYPE 3
- SEED WET DITCH FERTILIZER TYPE 4 ROLLED EROSION PREVENTION CATEGORY 10
- SEED SOUTHERN TALLGRASS ROADSIDE FERTILIZER TYPE 4 ROLLED EROSION PREVENTION CATEGORY 25
- SEED SOUTHERN SHORTGRASS ROADSIDE FERTILIZER TYPE 3 ROLLED EROSION PREVENTION CATEGORY 25
- SEE LANDSCAPING PLANS
- SEED SOUTHERN TALLGRASS ROADSIDE FERTILIZER TYPE 3 ROLLED EROSION PREVENTION CATEGORY 10
- CP — CULVERT END CONTROLS
- STORM DRAIN INLET PROTECTION
- SURFACE FLOW DIRECTION
- EXISTING RIGHT-OF-WAY
- PROPOSED RIGHT-OF-WAY
- TEMPORARY EASEMENT
- CONSTRUCTION LIMITS
- EXISTING PERMANENT EASEMENT
- PERMANENT EASEMENT
- PARCEL LINE
- MS — SILT FENCE (MACHINE SLICED)
- BR — SEDIMENT CONTROL LOG (SCL) TYPE WOOD FIBER
- AREA OF ENVIRONMENTAL SENSITIVITY

NOTE:

SILT FENCE SHALL FOLLOW, AS CLOSE AS POSSIBLE, TO A SINGLE CONTOUR.

0 50 100
SCALE FEET

Default

BOLTON & MENK
12224 NICOLLET AVENUE
BURNSVILLE, MINNESOTA 55337
Phone: (952) 890-0509
Email: Burnsville@bolton-menk.com
www.bolton-menk.com

REV.	BY	DATE

I HEREBY CERTIFY THAT THIS PLAN, SPECIFICATION, OR REPORT WAS PREPARED BY ME OR UNDER MY DIRECT SUPERVISION AND THAT I AM A DULY LICENSED PROFESSIONAL ENGINEER UNDER THE LAWS OF THE STATE OF MINNESOTA.

JOHN L. PERKINS
LIC. NO. 56278 DATE 03/14/2025

DESIGNED MMH
DRAWN MMH
CHECKED JLP

S.P. 1002-124, S.P. 1008-113, S.P. 010-596-014, S.P. 010-596-016, S.P. 010-613-009, S.P. 241-020-003, S.P. 241-090-001

TH 5 RECONSTRUCTION

EROSION CONTROL & TURF ESTABLISHMENT PLANS

SHEET 545 OF 729

0T4M00197_pen.tbl
H:\CACO\0T4M00197\CAD\ORD\CACO-0T4M00197\plans\Turf\cd1002124_325tep009.dgn
pdf-B and W.pltcfg
8:40:05 PM
John.Perkins
5/6/2025

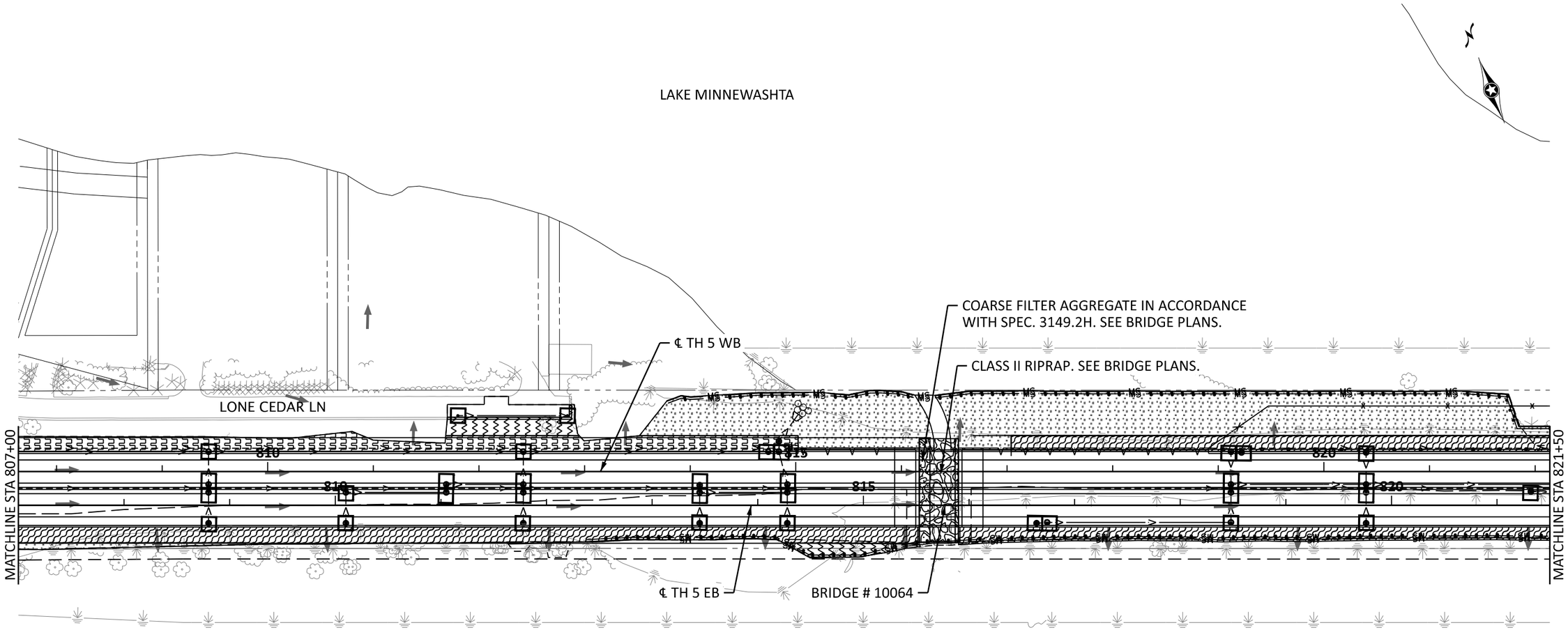

NOTE:

SILT FENCE SHALL FOLLOW, AS CLOSE
AS POSSIBLE, TO A SINGLE CONTOUR.

LEGEND

- SEED SOUTHERN SHORTGRASS ROADSIDE FERTILIZER TYPE 3 MULCH MATERIAL TYPE 3
- SEED SOUTHERN TALLGRASS ROADSIDE FERTILIZER TYPE 3 MULCH MATERIAL TYPE 3
- SEED SOUTHERN BOULEVARD FERTILIZER TYPE 3 MULCH MATERIAL TYPE 3
- SEED RESIDENTIAL TURFGRASS FERTILIZER TYPE 1 MULCH MATERIAL TYPE 3
- SEED WET DITCH FERTILIZER TYPE 4 ROLLED EROSION PREVENTION CATEGORY 10
- SEED SOUTHERN TALLGRASS ROADSIDE FERTILIZER TYPE 4 ROLLED EROSION PREVENTION CATEGORY 25
- SEED SOUTHERN SHORTGRASS ROADSIDE FERTILIZER TYPE 3 ROLLED EROSION PREVENTION CATEGORY 25
- SEE LANDSCAPING PLANS
- SEED SOUTHERN TALLGRASS ROADSIDE FERTILIZER TYPE 3 ROLLED EROSION PREVENTION CATEGORY 10
- CP CULVERT END CONTROLS
- STORM DRAIN INLET PROTECTION
- SURFACE FLOW DIRECTION
- EXISTING RIGHT-OF-WAY
- PROPOSED RIGHT-OF-WAY
- TEMPORARY EASEMENT
- CONSTRUCTION LIMITS
- EXISTING PERMANENT EASEMENT
- PERMANENT EASEMENT
- PARCEL LINE
- MS SILT FENCE (MACHINE SLICED)
- BR SEDIMENT CONTROL LOG (SCL) TYPE WOOD FIBER
- AREA OF ENVIRONMENTAL SENSITIVITY

0 50 100
SCALE FEET

BOLTON & MENK
12224 NICOLLET AVENUE
BURNSVILLE, MINNESOTA 55337
Phone: (952) 890-0509
Email: Burnsville@bolton-menk.com
www.bolton-menk.com

REV.	BY	DATE

I HEREBY CERTIFY THAT THIS PLAN, SPECIFICATION, OR REPORT WAS PREPARED BY ME OR UNDER MY DIRECT SUPERVISION AND THAT I AM A DULY LICENSED PROFESSIONAL ENGINEER UNDER THE LAWS OF THE STATE OF MINNESOTA.

JOHN L. PERKINS
LIC. NO. 56278 DATE 03/14/2025

DESIGNED MMH
DRAWN MMH
CHECKED JLP

S.P. 1002-124, S.P. 1008-113, S.P. 010-596-014,
S.P. 010-596-016, S.P. 010-613-009, S.P. 241-020-003, S.P. 241-090-001

TH 5 RECONSTRUCTION

EROSION CONTROL & TURF ESTABLISHMENT PLANS

0T4M00197_pen.tbl
pdf-B and W.pltcfg
2:41:31 PM
H:\CACO\0T4M00197\CAD\ORD\CACO-0T4M00197\plans\Turf\cd1002124_325tep010.dgn
John.Perkins
5/12/2025
Default

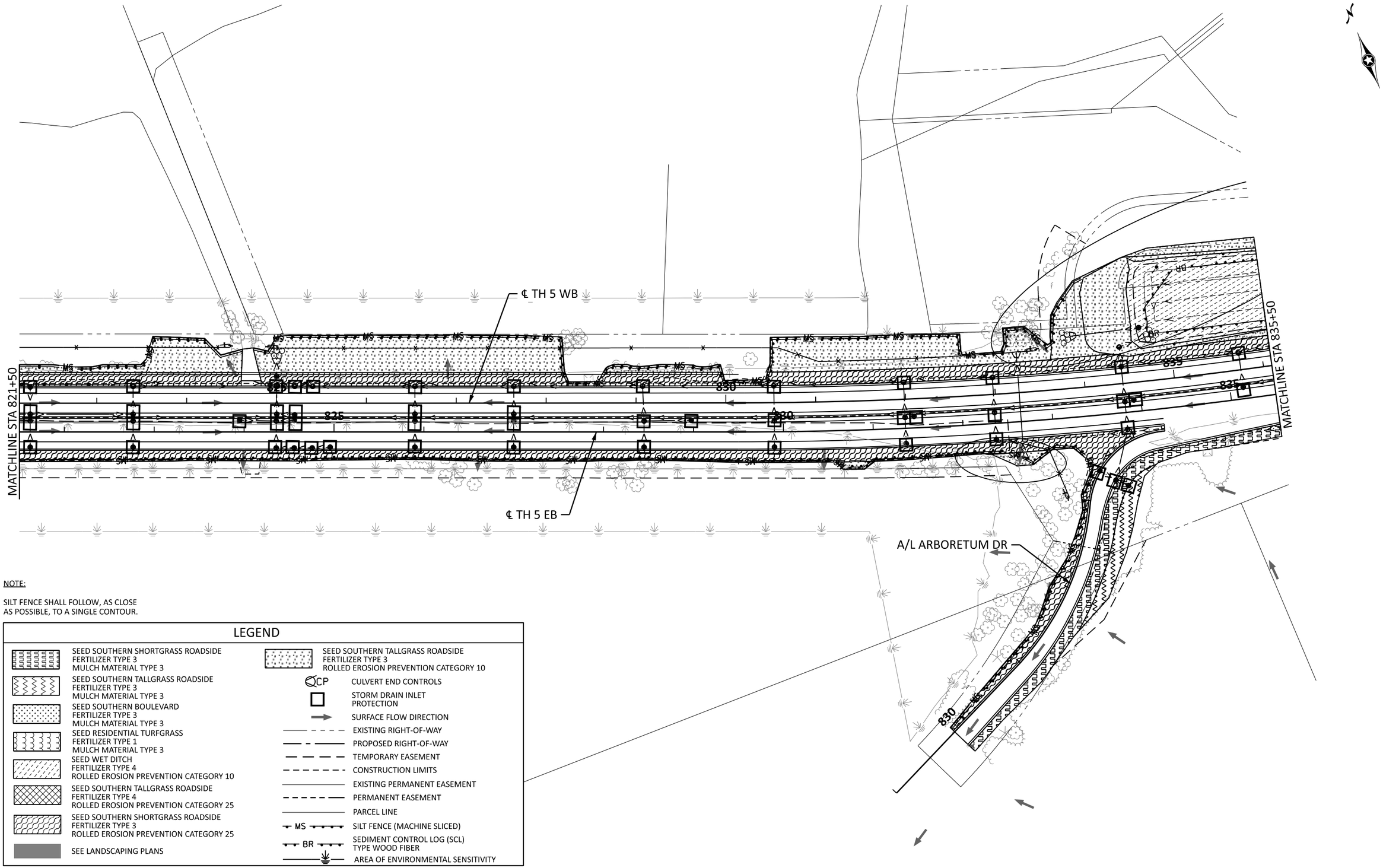

NOTE:

SILT FENCE SHALL FOLLOW, AS CLOSE AS POSSIBLE, TO A SINGLE CONTOUR.

LEGEND

- SEED SOUTHERN SHORTGRASS ROADSIDE FERTILIZER TYPE 3 MULCH MATERIAL TYPE 3
- SEED SOUTHERN TALLGRASS ROADSIDE FERTILIZER TYPE 3 MULCH MATERIAL TYPE 3
- SEED SOUTHERN BOULEVARD FERTILIZER TYPE 3 MULCH MATERIAL TYPE 3
- SEED RESIDENTIAL TURFGRASS FERTILIZER TYPE 1 MULCH MATERIAL TYPE 3
- SEED WET DITCH FERTILIZER TYPE 4 ROLLED EROSION PREVENTION CATEGORY 10
- SEED SOUTHERN TALLGRASS ROADSIDE FERTILIZER TYPE 4 ROLLED EROSION PREVENTION CATEGORY 25
- SEED SOUTHERN SHORTGRASS ROADSIDE FERTILIZER TYPE 3 ROLLED EROSION PREVENTION CATEGORY 25
- SEE LANDSCAPING PLANS
- SEED SOUTHERN TALLGRASS ROADSIDE FERTILIZER TYPE 3 ROLLED EROSION PREVENTION CATEGORY 10
- CP — CULVERT END CONTROLS
- STORM DRAIN INLET PROTECTION
- SURFACE FLOW DIRECTION
- EXISTING RIGHT-OF-WAY
- PROPOSED RIGHT-OF-WAY
- TEMPORARY EASEMENT
- CONSTRUCTION LIMITS
- EXISTING PERMANENT EASEMENT
- PERMANENT EASEMENT
- PARCEL LINE
- MS — SILT FENCE (MACHINE SLICED)
- BR — SEDIMENT CONTROL LOG (SCL) TYPE WOOD FIBER
- AREA OF ENVIRONMENTAL SENSITIVITY

0 50 100
SCALE FEET

BOLTON & MENK

12224 NICOLLET AVENUE
BURNSVILLE, MINNESOTA 55337
Phone: (952) 890-0509
Email: Burnsville@bolton-menk.com
www.bolton-menk.com

REV.	BY	DATE

I HEREBY CERTIFY THAT THIS PLAN, SPECIFICATION, OR REPORT WAS PREPARED BY ME OR UNDER MY DIRECT SUPERVISION AND THAT I AM A DULY LICENSED PROFESSIONAL ENGINEER UNDER THE LAWS OF THE STATE OF MINNESOTA.

JOHN L. PERKINS
LIC. NO. 56278 DATE 03/14/2025

DESIGNED MMH
DRAWN MMH
CHECKED JLP

S.P. 1002-124, S.P. 1008-113, S.P. 010-596-014, S.P. 010-596-016, S.P. 010-613-009, S.P. 241-020-003, S.P. 241-090-001

TH 5 RECONSTRUCTION

EROSION CONTROL & TURF ESTABLISHMENT PLANS

John.Perkins 5/6/2025
pdf-B and W.pltcfg 8:40:07 PM
0T4M00197_pen.tbl
H:\CACO\0T4M00197\CAD\ORD\CACO-0T4M00197\plans\Turf\cd1002124_325tep011.dgn
Default

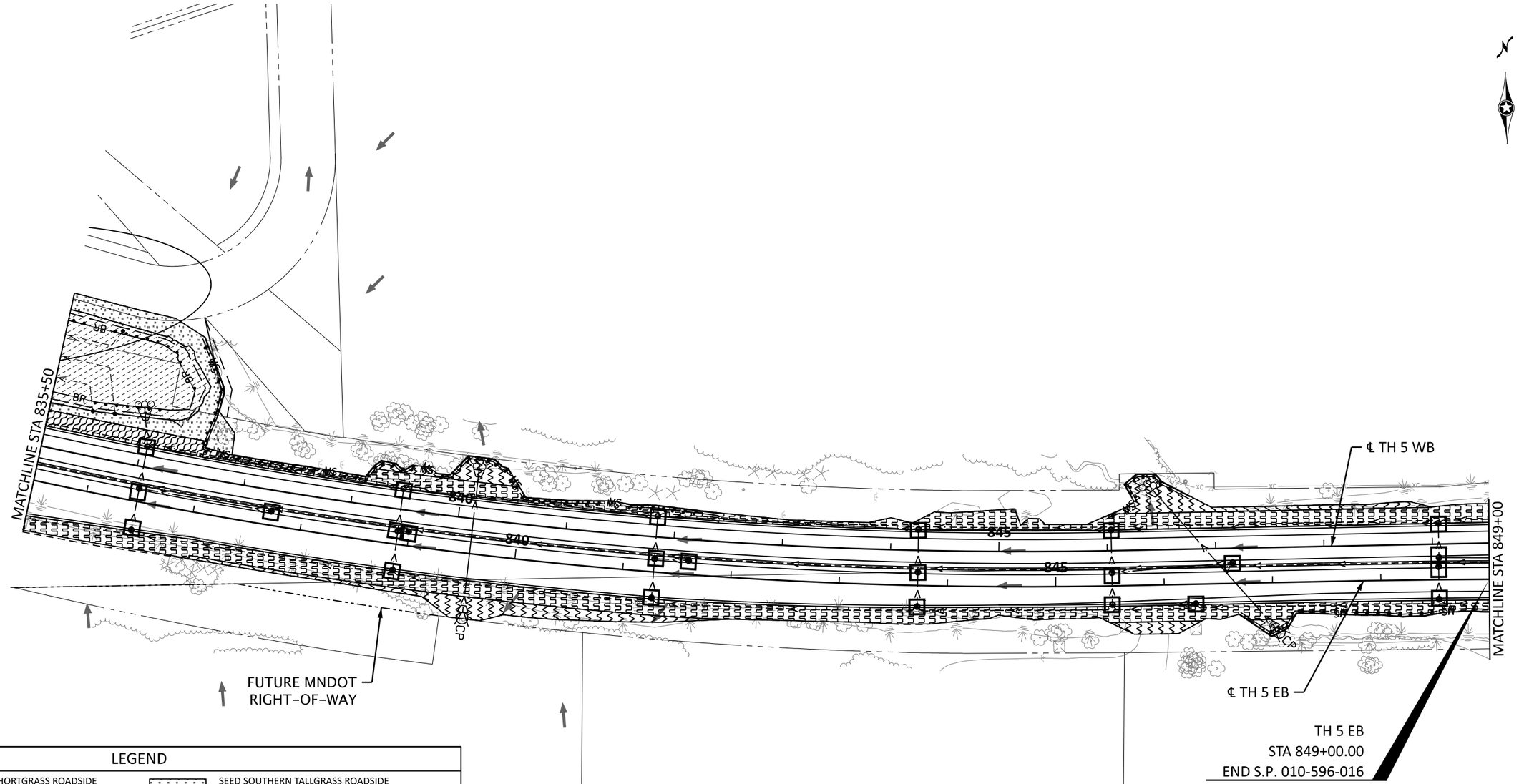

NOTE:

SILT FENCE SHALL FOLLOW, AS CLOSE AS POSSIBLE, TO A SINGLE CONTOUR.

LEGEND

- SEED SOUTHERN SHORTGRASS ROADSIDE FERTILIZER TYPE 3 MULCH MATERIAL TYPE 3
- SEED SOUTHERN TALLGRASS ROADSIDE FERTILIZER TYPE 3 MULCH MATERIAL TYPE 3
- SEED SOUTHERN BOULEVARD FERTILIZER TYPE 3 MULCH MATERIAL TYPE 3
- SEED RESIDENTIAL TURFGRASS FERTILIZER TYPE 1 MULCH MATERIAL TYPE 3
- SEED WET DITCH FERTILIZER TYPE 4 ROLLED EROSION PREVENTION CATEGORY 10
- SEED SOUTHERN TALLGRASS ROADSIDE FERTILIZER TYPE 4 ROLLED EROSION PREVENTION CATEGORY 25
- SEED SOUTHERN SHORTGRASS ROADSIDE FERTILIZER TYPE 3 ROLLED EROSION PREVENTION CATEGORY 25
- SEE LANDSCAPING PLANS
- SEED SOUTHERN TALLGRASS ROADSIDE FERTILIZER TYPE 3 ROLLED EROSION PREVENTION CATEGORY 10
- CCP — CULVERT END CONTROLS
- STORM DRAIN INLET PROTECTION
- SURFACE FLOW DIRECTION
- EXISTING RIGHT-OF-WAY
- PROPOSED RIGHT-OF-WAY
- TEMPORARY EASEMENT
- CONSTRUCTION LIMITS
- EXISTING PERMANENT EASEMENT
- PERMANENT EASEMENT
- PARCEL LINE
- MS — SILT FENCE (MACHINE SLICED)
- BR — SEDIMENT CONTROL LOG (SCL) TYPE WOOD FIBER
- AREA OF ENVIRONMENTAL SENSITIVITY

0 50 100
SCALE FEET

BOLTON & MENK
12224 NICOLLET AVENUE
BURNSVILLE, MINNESOTA 55337
Phone: (952) 890-0509
Email: Burnsville@bolton-menk.com
www.bolton-menk.com

REV.	BY	DATE

I HEREBY CERTIFY THAT THIS PLAN, SPECIFICATION, OR REPORT WAS PREPARED BY ME OR UNDER MY DIRECT SUPERVISION AND THAT I AM A DULY LICENSED PROFESSIONAL ENGINEER UNDER THE LAWS OF THE STATE OF MINNESOTA.

JOHN L. PERKINS
LIC. NO. 56278 DATE 03/14/2025

DESIGNED MMH
DRAWN MMH
CHECKED JLP

S.P. 1002-124, S.P. 1008-113, S.P. 010-596-014, S.P. 010-596-016, S.P. 010-613-009, S.P. 241-020-003, S.P. 241-090-001

TH 5 RECONSTRUCTION

EROSION CONTROL & TURF ESTABLISHMENT PLANS

SHEET 548 OF 729

0T4M00197_pen.tbl
H:\CACO\0T4M00197\CAD\ORD\CACO-0T4M00197\plans\Turf\cd1002124_325step012.dgn
pdf-B and W.pltcfg
8:40:08 PM
John.Perkins
5/6/2025
Default

LEGEND

- SEED SOUTHERN SHORTGRASS ROADSIDE FERTILIZER TYPE 3 MULCH MATERIAL TYPE 3
- SEED SOUTHERN TALLGRASS ROADSIDE FERTILIZER TYPE 3 MULCH MATERIAL TYPE 3
- SEED SOUTHERN BOULEVARD FERTILIZER TYPE 3 MULCH MATERIAL TYPE 3
- SEED RESIDENTIAL TURFGRASS FERTILIZER TYPE 1 MULCH MATERIAL TYPE 3
- SEED WET DITCH FERTILIZER TYPE 4 ROLLED EROSION PREVENTION CATEGORY 10
- SEED SOUTHERN TALLGRASS ROADSIDE FERTILIZER TYPE 4 ROLLED EROSION PREVENTION CATEGORY 25
- SEED SOUTHERN SHORTGRASS ROADSIDE FERTILIZER TYPE 3 ROLLED EROSION PREVENTION CATEGORY 25
- SEE LANDSCAPING PLANS
- SEED SOUTHERN TALLGRASS ROADSIDE FERTILIZER TYPE 3 ROLLED EROSION PREVENTION CATEGORY 10
- CP — CULVERT END CONTROLS
- STORM DRAIN INLET PROTECTION
- SURFACE FLOW DIRECTION
- EXISTING RIGHT-OF-WAY
- PROPOSED RIGHT-OF-WAY
- TEMPORARY EASEMENT
- CONSTRUCTION LIMITS
- EXISTING PERMANENT EASEMENT
- PERMANENT EASEMENT
- PARCEL LINE
- MS — SILT FENCE (MACHINE SLICED)
- BR — SEDIMENT CONTROL LOG (SCL) TYPE WOOD FIBER
- AREA OF ENVIRONMENTAL SENSITIVITY

NOTE:

SILT FENCE SHALL FOLLOW, AS CLOSE AS POSSIBLE, TO A SINGLE CONTOUR.

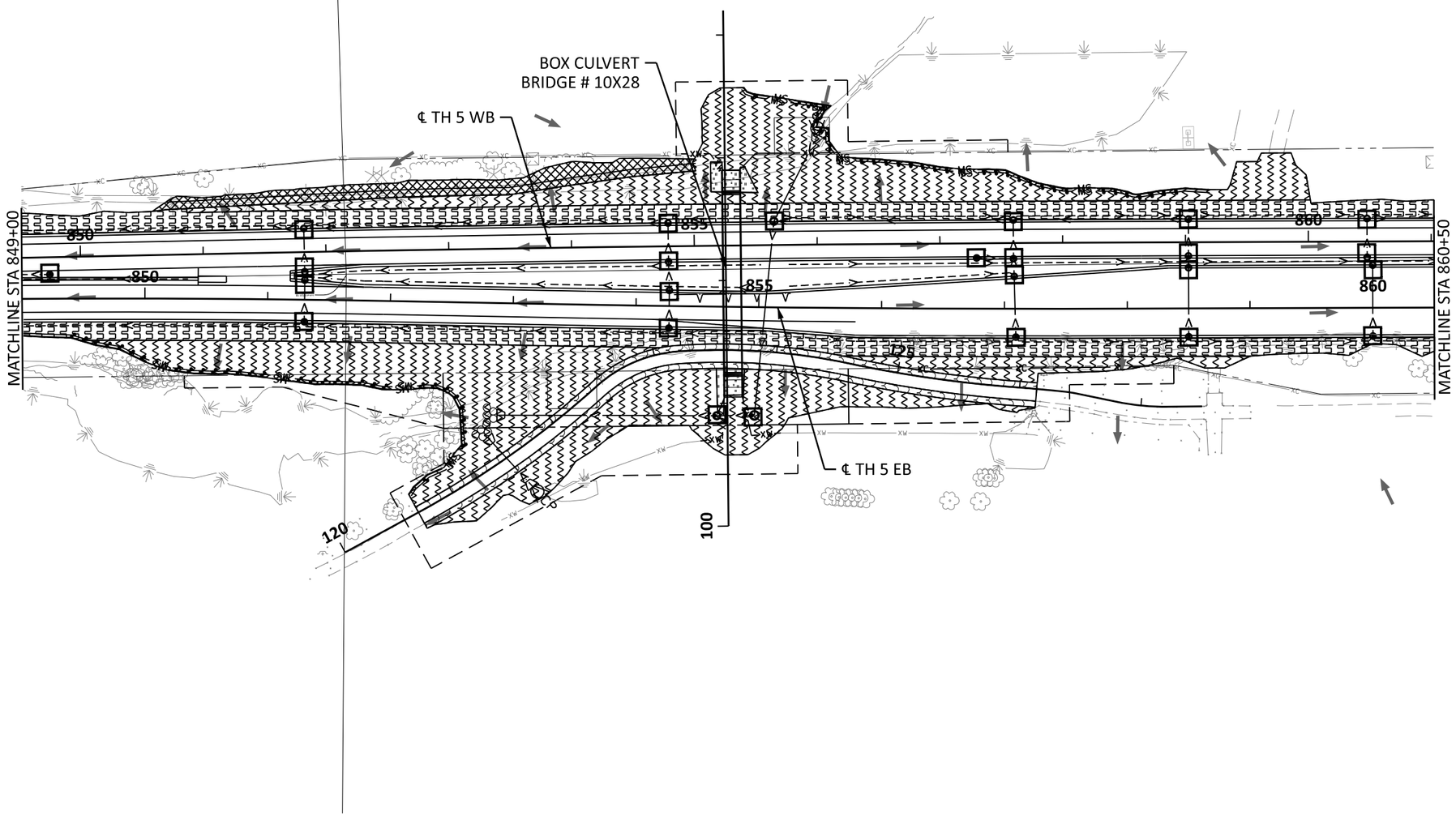

0 50 100
SCALE FEET

BOLTON & MENK
12224 NICOLLET AVENUE
BURNSVILLE, MINNESOTA 55337
Phone: (952) 890-0509
Email: Burnsville@bolton-menk.com
www.bolton-menk.com

REV.	BY	DATE

I HEREBY CERTIFY THAT THIS PLAN, SPECIFICATION, OR REPORT WAS PREPARED BY ME OR UNDER MY DIRECT SUPERVISION AND THAT I AM A DULY LICENSED PROFESSIONAL ENGINEER UNDER THE LAWS OF THE STATE OF MINNESOTA.

JOHN L. PERKINS
LIC. NO. 56278 DATE 03/14/2025

DESIGNED MMH
DRAWN MMH
CHECKED JLP

S.P. 1002-124, S.P. 1008-113, S.P. 010-596-014, S.P. 010-596-016, S.P. 010-613-009, S.P. 241-020-003, S.P. 241-090-001

TH 5 RECONSTRUCTION

EROSION CONTROL & TURF ESTABLISHMENT PLANS

Default
John.Perkins 5/7/2025
pdf-B and W.pltcfg 5:59:07 AM
0T4M00197_pen.tbl
H:\CACO\0T4M00197\CAD\ORD\CACO-0T4M00197\plans\Turf\cd1002124_325step013.dgn

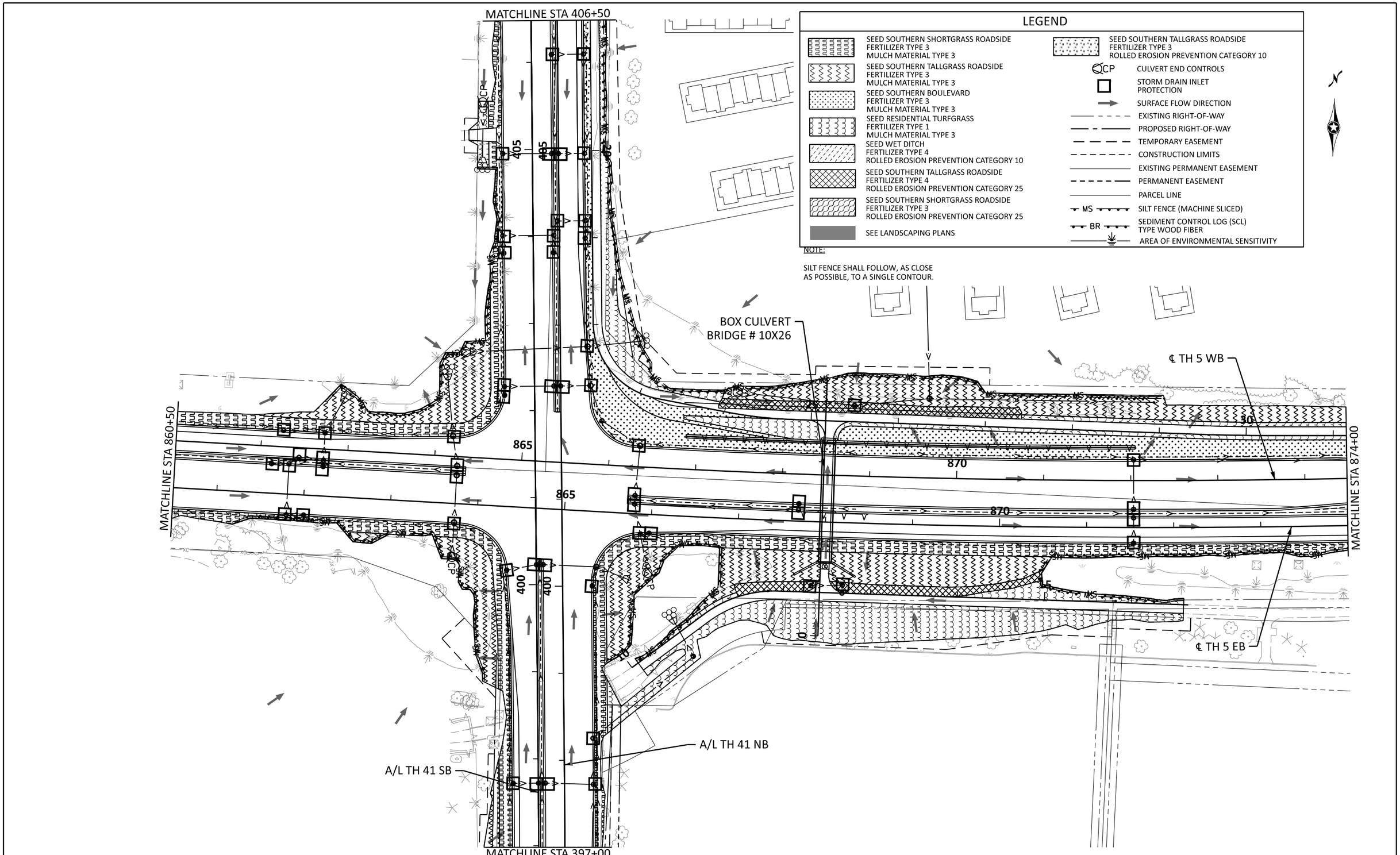

0 50 100
SCALE FEET

BOLTON & MENK
12224 NICOLLET AVENUE
BURNSVILLE, MINNESOTA 55337
Phone: (952) 890-0509
Email: Burnsville@bolton-menk.com
www.bolton-menk.com

REV.	BY	DATE

I HEREBY CERTIFY THAT THIS PLAN, SPECIFICATION, OR REPORT WAS PREPARED BY ME OR UNDER MY DIRECT SUPERVISION AND THAT I AM A DULY LICENSED PROFESSIONAL ENGINEER UNDER THE LAWS OF THE STATE OF MINNESOTA.

JOHN L. PERKINS
LIC. NO. 56278 DATE 03/14/2025

DESIGNED MMH
DRAWN MMH
CHECKED JLP

S.P. 1002-124, S.P. 1008-113, S.P. 010-596-014, S.P. 010-596-016, S.P. 010-613-009, S.P. 241-020-003, S.P. 241-090-001

TH 5 RECONSTRUCTION

EROSION CONTROL & TURF ESTABLISHMENT PLANS

John.Perkins 5/6/2025
pdf-B and W.pltcfg 8:40:10 PM
0T4M00197_pen.tbl
H:\CACO\0T4M00197\CAD\ORD\CACO-0T4M00197\plans\Turf\cd1002124_325tep014.dgn
Default

LEGEND

- SEED SOUTHERN SHORTGRASS ROADSIDE
  FERTILIZER TYPE 3
  MULCH MATERIAL TYPE 3
- SEED SOUTHERN TALLGRASS ROADSIDE
  FERTILIZER TYPE 3
  MULCH MATERIAL TYPE 3
- SEED SOUTHERN BOULEVARD
  FERTILIZER TYPE 3
  MULCH MATERIAL TYPE 3
- SEED RESIDENTIAL TURFGRASS
  FERTILIZER TYPE 1
  MULCH MATERIAL TYPE 3
- SEED WET DITCH
  FERTILIZER TYPE 4
  ROLLED EROSION PREVENTION CATEGORY 10
- SEED SOUTHERN TALLGRASS ROADSIDE
  FERTILIZER TYPE 4
  ROLLED EROSION PREVENTION CATEGORY 25
- SEED SOUTHERN SHORTGRASS ROADSIDE
  FERTILIZER TYPE 3
  ROLLED EROSION PREVENTION CATEGORY 25
- SEE LANDSCAPING PLANS
- SEED SOUTHERN TALLGRASS ROADSIDE
  FERTILIZER TYPE 3
  ROLLED EROSION PREVENTION CATEGORY 10
- CP — CULVERT END CONTROLS
- STORM DRAIN INLET PROTECTION
- SURFACE FLOW DIRECTION
- EXISTING RIGHT-OF-WAY
- PROPOSED RIGHT-OF-WAY
- TEMPORARY EASEMENT
- CONSTRUCTION LIMITS
- EXISTING PERMANENT EASEMENT
- PERMANENT EASEMENT
- PARCEL LINE
- MS — SILT FENCE (MACHINE SLICED)
- BR — SEDIMENT CONTROL LOG (SCL) TYPE WOOD FIBER
- AREA OF ENVIRONMENTAL SENSITIVITY

NOTE:

SILT FENCE SHALL FOLLOW, AS CLOSE AS POSSIBLE, TO A SINGLE CONTOUR.

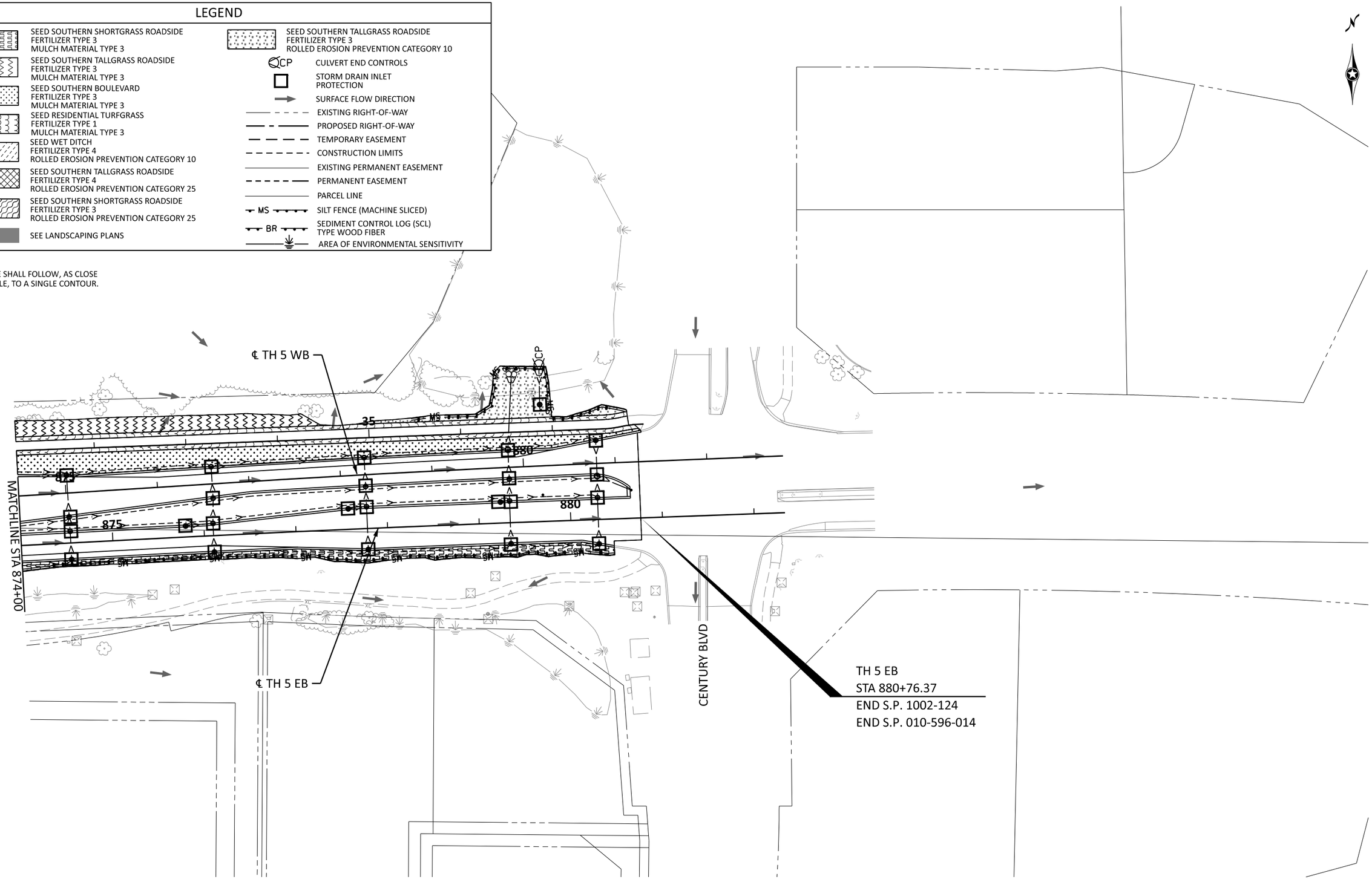

0 50 100
SCALE FEET

Default

BOLTON & MENK
12224 NICOLLET AVENUE
BURNSVILLE, MINNESOTA 55337
Phone: (952) 890-0509
Email: Burnsville@bolton-menk.com
www.bolton-menk.com

REV.	BY	DATE

I HEREBY CERTIFY THAT THIS PLAN, SPECIFICATION, OR REPORT WAS PREPARED BY ME OR UNDER MY DIRECT SUPERVISION AND THAT I AM A DULY LICENSED PROFESSIONAL ENGINEER UNDER THE LAWS OF THE STATE OF MINNESOTA.

JOHN L. PERKINS
LIC. NO. 56278 DATE 03/14/2025

DESIGNED MMH
DRAWN MMH
CHECKED JLP

S.P. 1002-124, S.P. 1008-113, S.P. 010-596-014,
S.P. 010-596-016, S.P. 010-613-009, S.P. 241-020-003, S.P. 241-090-001

TH 5 RECONSTRUCTION

EROSION CONTROL & TURF ESTABLISHMENT PLANS

SHEET 551 OF 729

pdf-B and W.pltcfg 0T4M00197_pen.tbl
8:40:11 PM H:\CACO\0T4M00197\CAD\ORD\CACO-0T4M00197\plans\Turf\cd1002124_325tep015.dgn
John.Perkins
5/6/2025

LEGEND

- SEED SOUTHERN SHORTGRASS ROADSIDE
  FERTILIZER TYPE 3
  MULCH MATERIAL TYPE 3
- SEED SOUTHERN TALLGRASS ROADSIDE
  FERTILIZER TYPE 3
  MULCH MATERIAL TYPE 3
- SEED SOUTHERN BOULEVARD
  FERTILIZER TYPE 3
  MULCH MATERIAL TYPE 3
- SEED RESIDENTIAL TURFGRASS
  FERTILIZER TYPE 1
  MULCH MATERIAL TYPE 3
- SEED WET DITCH
  FERTILIZER TYPE 4
  ROLLED EROSION PREVENTION CATEGORY 10
- SEED SOUTHERN TALLGRASS ROADSIDE
  FERTILIZER TYPE 4
  ROLLED EROSION PREVENTION CATEGORY 25
- SEED SOUTHERN SHORTGRASS ROADSIDE
  FERTILIZER TYPE 3
  ROLLED EROSION PREVENTION CATEGORY 25
- SEE LANDSCAPING PLANS
- SEED SOUTHERN TALLGRASS ROADSIDE
  FERTILIZER TYPE 3
  ROLLED EROSION PREVENTION CATEGORY 10
- CP — CULVERT END CONTROLS
- STORM DRAIN INLET PROTECTION
- SURFACE FLOW DIRECTION
- EXISTING RIGHT-OF-WAY
- PROPOSED RIGHT-OF-WAY
- TEMPORARY EASEMENT
- CONSTRUCTION LIMITS
- EXISTING PERMANENT EASEMENT
- PERMANENT EASEMENT
- PARCEL LINE
- MS — SILT FENCE (MACHINE SLICED)
- BR — SEDIMENT CONTROL LOG (SCL) TYPE WOOD FIBER
- AREA OF ENVIRONMENTAL SENSITIVITY

NOTE:

SILT FENCE SHALL FOLLOW, AS CLOSE AS POSSIBLE, TO A SINGLE CONTOUR.

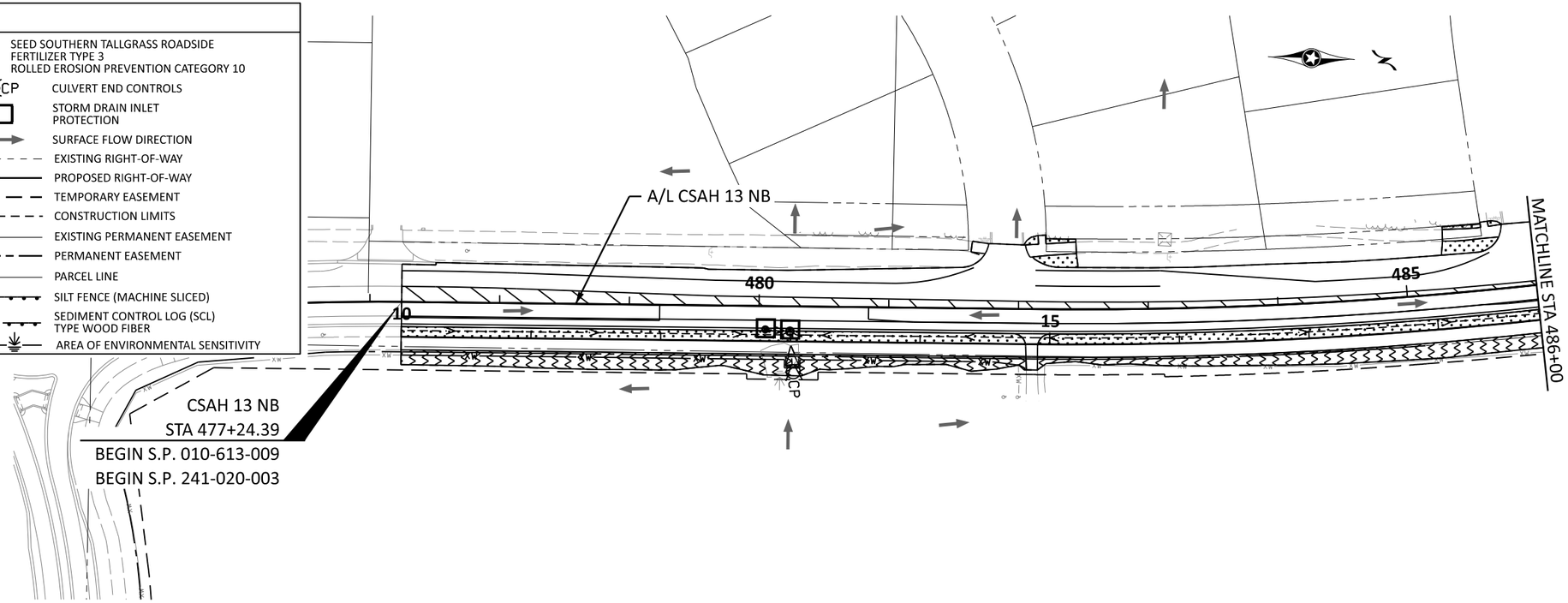

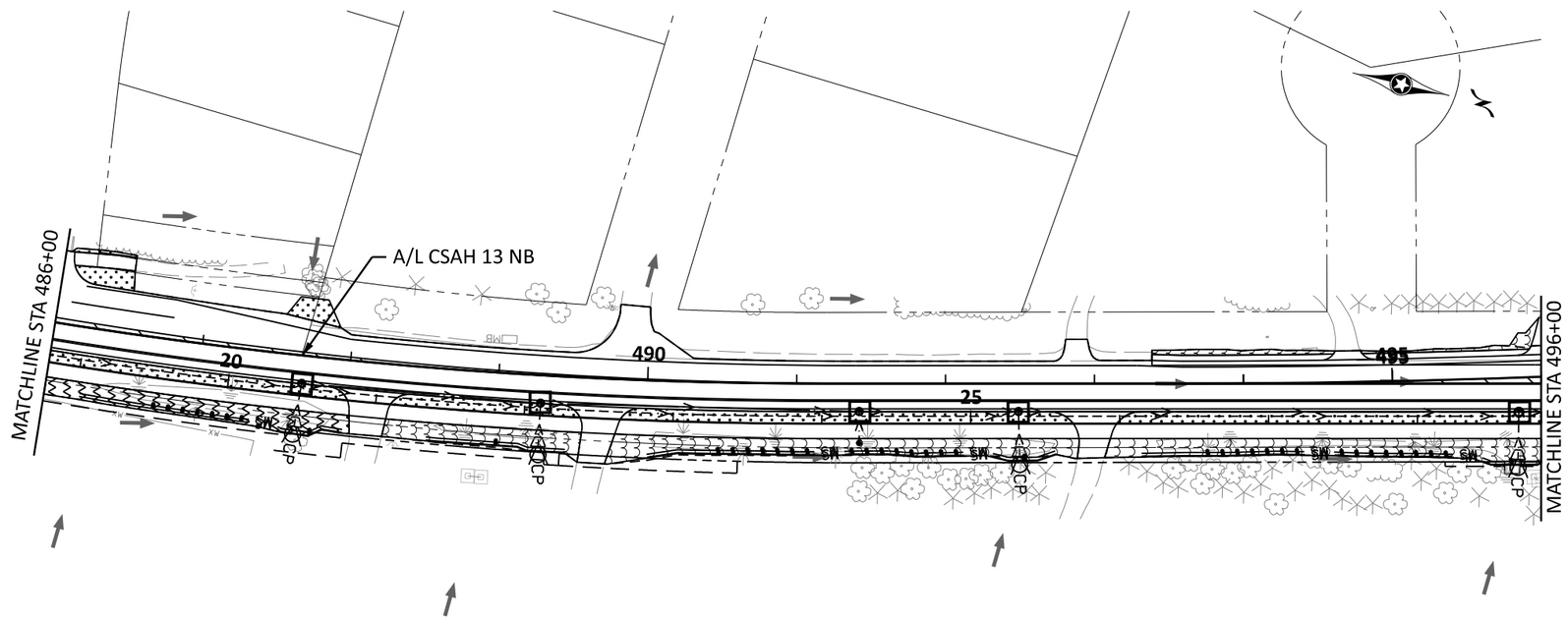

0T4M00197_pen.tbl
pdf-B and W.pltcfg
H:\CACO\0T4M00197\CAD\ORD\CACO-0T4M00197\plans\Turf\cd1002124_325tep016.dgn
John.Perkins
8:40:12 PM
5/6/2025
Default

0 50 100
SCALE FEET

BOLTON & MENK
12224 NICOLLET AVENUE
BURNSVILLE, MINNESOTA 55337
Phone: (952) 890-0509
Email: Burnsville@bolton-menk.com
www.bolton-menk.com

REV.	BY	DATE

I HEREBY CERTIFY THAT THIS PLAN, SPECIFICATION, OR REPORT WAS PREPARED BY ME OR UNDER MY DIRECT SUPERVISION AND THAT I AM A DULY LICENSED PROFESSIONAL ENGINEER UNDER THE LAWS OF THE STATE OF MINNESOTA.

JOHN L. PERKINS
LIC. NO. 56278 DATE 03/14/2025

DESIGNED MMH
DRAWN MMH
CHECKED JLP

S.P. 1002-124, S.P. 1008-113, S.P. 010-596-014,
S.P. 010-596-016, S.P. 010-613-009, S.P. 241-020-003, S.P. 241-090-001

TH 5 RECONSTRUCTION

EROSION CONTROL & TURF ESTABLISHMENT PLANS

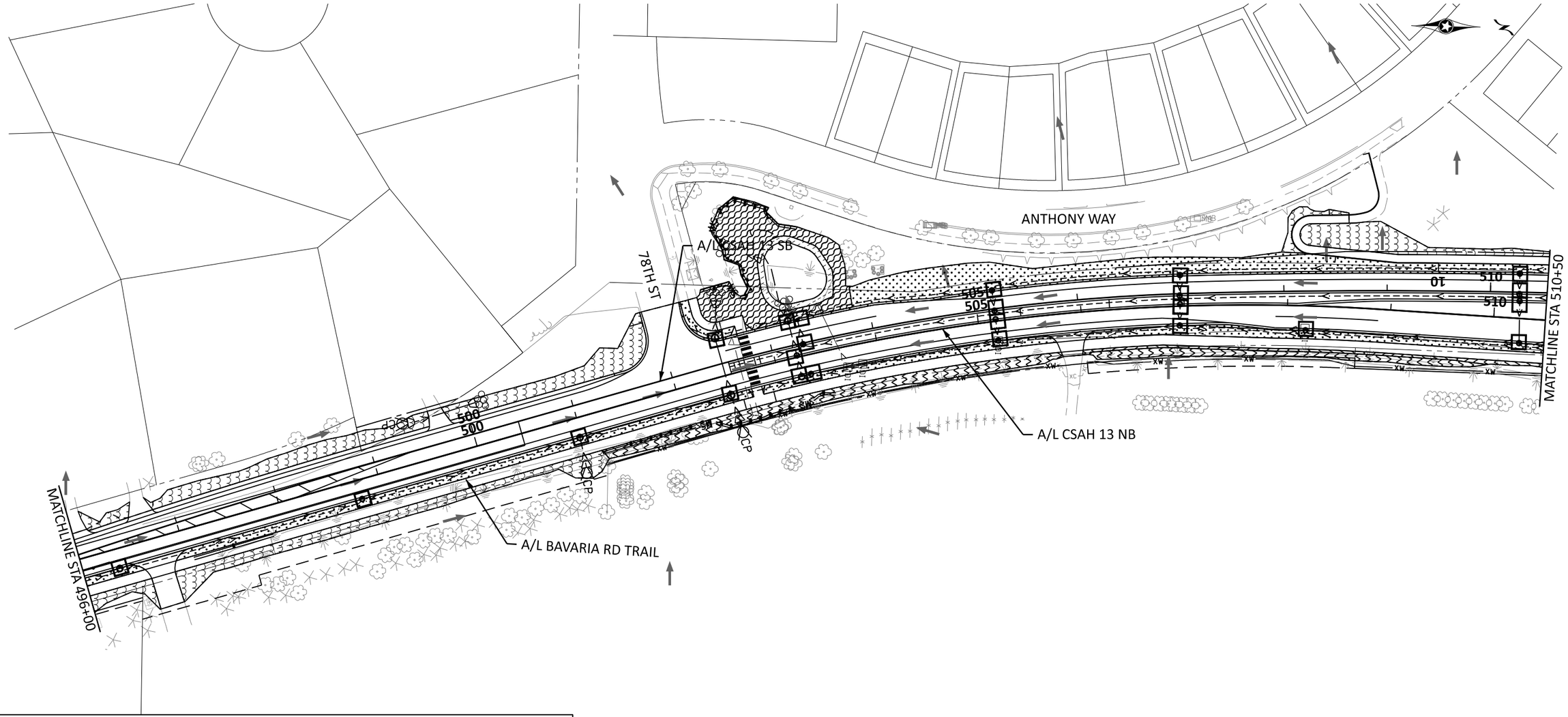

LEGEND

- SEED SOUTHERN SHORTGRASS ROADSIDE FERTILIZER TYPE 3 MULCH MATERIAL TYPE 3
- SEED SOUTHERN TALLGRASS ROADSIDE FERTILIZER TYPE 3 MULCH MATERIAL TYPE 3
- SEED SOUTHERN BOULEVARD FERTILIZER TYPE 3 MULCH MATERIAL TYPE 3
- SEED RESIDENTIAL TURFGRASS FERTILIZER TYPE 1 MULCH MATERIAL TYPE 3
- SEED WET DITCH FERTILIZER TYPE 4 ROLLED EROSION PREVENTION CATEGORY 10
- SEED SOUTHERN TALLGRASS ROADSIDE FERTILIZER TYPE 4 ROLLED EROSION PREVENTION CATEGORY 25
- SEED SOUTHERN SHORTGRASS ROADSIDE FERTILIZER TYPE 3 ROLLED EROSION PREVENTION CATEGORY 25
- SEE LANDSCAPING PLANS
- SEED SOUTHERN TALLGRASS ROADSIDE FERTILIZER TYPE 3 ROLLED EROSION PREVENTION CATEGORY 10
- CP — CULVERT END CONTROLS
- STORM DRAIN INLET PROTECTION
- SURFACE FLOW DIRECTION
- EXISTING RIGHT-OF-WAY
- PROPOSED RIGHT-OF-WAY
- TEMPORARY EASEMENT
- CONSTRUCTION LIMITS
- EXISTING PERMANENT EASEMENT
- PERMANENT EASEMENT
- PARCEL LINE
- MS — SILT FENCE (MACHINE SLICED)
- BR — SEDIMENT CONTROL LOG (SCL) TYPE WOOD FIBER
- AREA OF ENVIRONMENTAL SENSITIVITY

NOTE:

SILT FENCE SHALL FOLLOW, AS CLOSE AS POSSIBLE, TO A SINGLE CONTOUR.

0 50 100
SCALE FEET

BOLTON & MENK
12224 NICOLLET AVENUE
BURNSVILLE, MINNESOTA 55337
Phone: (952) 890-0509
Email: Burnsville@bolton-menk.com
www.bolton-menk.com

REV.	BY	DATE

I HEREBY CERTIFY THAT THIS PLAN, SPECIFICATION, OR REPORT WAS PREPARED BY ME OR UNDER MY DIRECT SUPERVISION AND THAT I AM A DULY LICENSED PROFESSIONAL ENGINEER UNDER THE LAWS OF THE STATE OF MINNESOTA.

JOHN L. PERKINS
LIC. NO. 56278 DATE 03/14/2025

DESIGNED MMH
DRAWN MMH
CHECKED JLP

S.P. 1002-124, S.P. 1008-113, S.P. 010-596-014, S.P. 010-596-016, S.P. 010-613-009, S.P. 241-020-003, S.P. 241-090-001

TH 5 RECONSTRUCTION

EROSION CONTROL & TURF ESTABLISHMENT PLANS

0T4M00197_pen.tbl
H:\CACO\0T4M00197\CAD\ORD\CACO-0T4M00197\plans\Turf\cd1002124_325tep017.dgn
pdf-B and W.pltcfg
8:40:12 PM
John.Perkins
5/6/2025
Default

LEGEND

- SEED SOUTHERN SHORTGRASS ROADSIDE
  FERTILIZER TYPE 3
  MULCH MATERIAL TYPE 3
- SEED SOUTHERN TALLGRASS ROADSIDE
  FERTILIZER TYPE 3
  MULCH MATERIAL TYPE 3
- SEED SOUTHERN BOULEVARD
  FERTILIZER TYPE 3
  MULCH MATERIAL TYPE 3
- SEED RESIDENTIAL TURFGRASS
  FERTILIZER TYPE 1
  MULCH MATERIAL TYPE 3
- SEED WET DITCH
  FERTILIZER TYPE 4
  ROLLED EROSION PREVENTION CATEGORY 10
- SEED SOUTHERN TALLGRASS ROADSIDE
  FERTILIZER TYPE 4
  ROLLED EROSION PREVENTION CATEGORY 25
- SEED SOUTHERN SHORTGRASS ROADSIDE
  FERTILIZER TYPE 3
  ROLLED EROSION PREVENTION CATEGORY 25
- SEE LANDSCAPING PLANS
- SEED SOUTHERN TALLGRASS ROADSIDE
  FERTILIZER TYPE 3
  ROLLED EROSION PREVENTION CATEGORY 10
- CP — CULVERT END CONTROLS
- STORM DRAIN INLET PROTECTION
- SURFACE FLOW DIRECTION
- EXISTING RIGHT-OF-WAY
- PROPOSED RIGHT-OF-WAY
- TEMPORARY EASEMENT
- CONSTRUCTION LIMITS
- EXISTING PERMANENT EASEMENT
- PERMANENT EASEMENT
- PARCEL LINE
- MS — SILT FENCE (MACHINE SLICED)
- BR — SEDIMENT CONTROL LOG (SCL) TYPE WOOD FIBER
- AREA OF ENVIRONMENTAL SENSITIVITY

NOTE:

SILT FENCE SHALL FOLLOW, AS CLOSE AS POSSIBLE, TO A SINGLE CONTOUR.

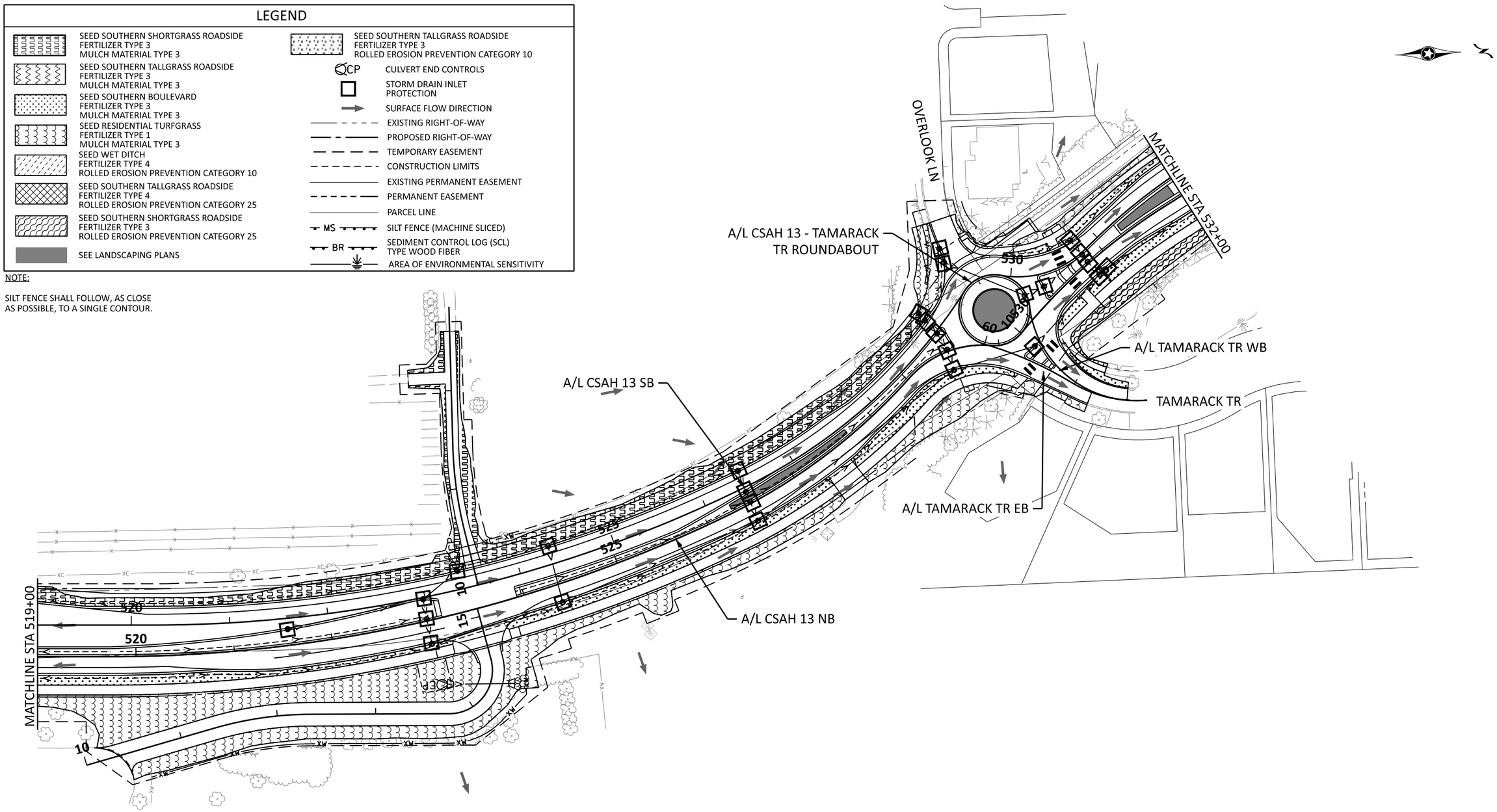

0 50 100
SCALE FEET

Default

BOLTON & MENK
12224 NICOLLET AVENUE
BURNSVILLE, MINNESOTA 55337
Phone: (952) 890-0509
Email: Burnsville@bolton-menk.com
www.bolton-menk.com

REV.	BY	DATE

I HEREBY CERTIFY THAT THIS PLAN, SPECIFICATION, OR REPORT WAS PREPARED BY ME OR UNDER MY DIRECT SUPERVISION AND THAT I AM A DULY LICENSED PROFESSIONAL ENGINEER UNDER THE LAWS OF THE STATE OF MINNESOTA.

JOHN L. PERKINS
LIC. NO. 56278 DATE 03/14/2025

DESIGNED MMH
DRAWN MMH
CHECKED JLP

S.P. 1002-124, S.P. 1008-113, S.P. 010-596-014,
S.P. 010-596-016, S.P. 010-613-009, S.P. 241-020-003, S.P. 241-090-001

TH 5 RECONSTRUCTION

EROSION CONTROL & TURF ESTABLISHMENT PLANS

John.Perkins 5/6/2025
pdf-B and W.pltcfg 8:40:13 PM
0T4M00197_pen.tbl
H:\CACO\0T4M00197\CAD\ORD\CACO-0T4M00197\plans\Turf\cd1002124_325tep018.dgn

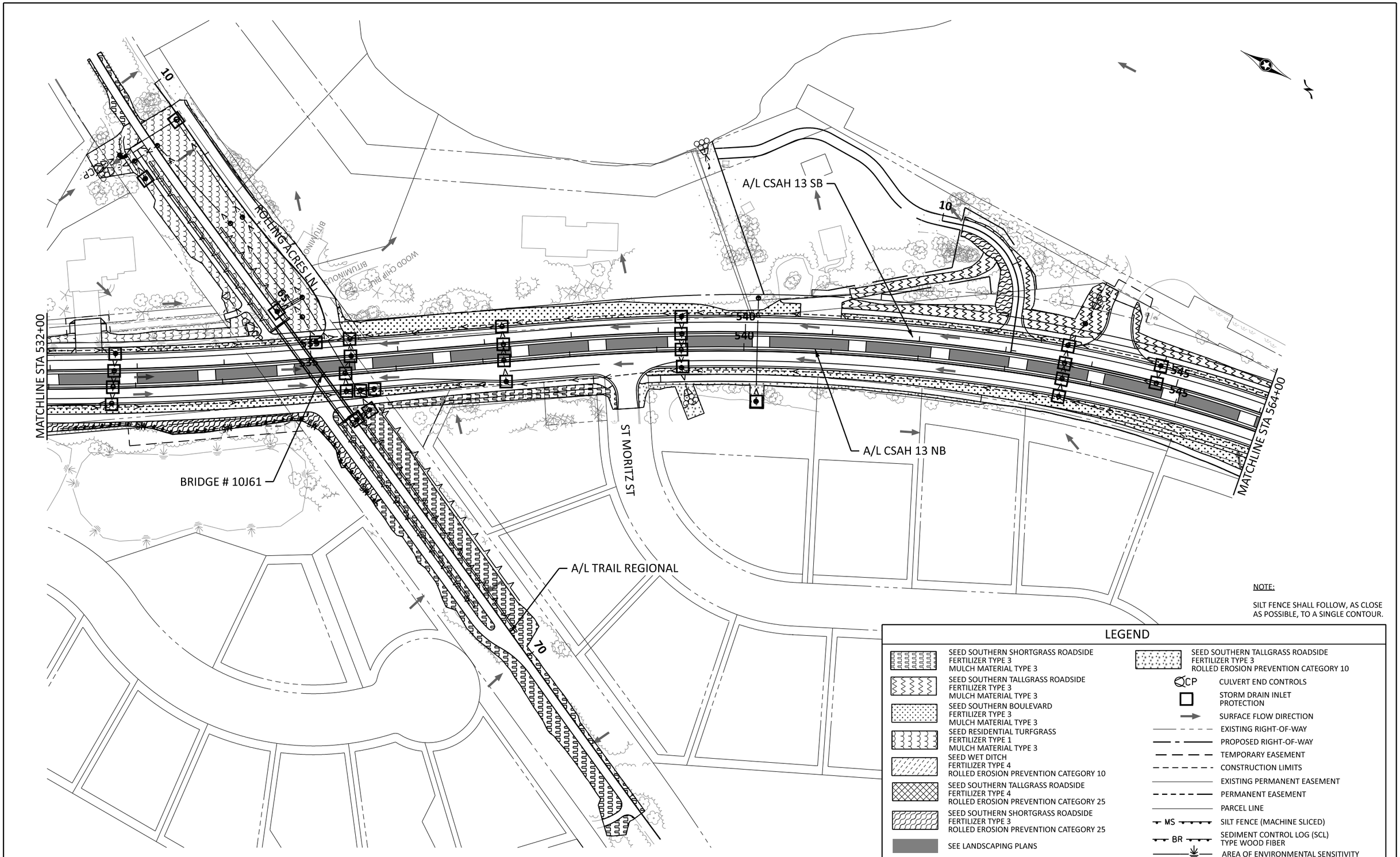

0 50 100
SCALE FEET

Default

BOLTON & MENK
12224 NICOLLET AVENUE
BURNSVILLE, MINNESOTA 55337
Phone: (952) 890-0509
Email: Burnsville@bolton-menk.com
www.bolton-menk.com

REV.	BY	DATE

I HEREBY CERTIFY THAT THIS PLAN, SPECIFICATION, OR REPORT WAS PREPARED BY ME OR UNDER MY DIRECT SUPERVISION AND THAT I AM A DULY LICENSED PROFESSIONAL ENGINEER UNDER THE LAWS OF THE STATE OF MINNESOTA.

JOHN L. PERKINS
LIC. NO. 56278 DATE 03/14/2025

DESIGNED MMH
DRAWN MMH
CHECKED JLP

S.P. 1002-124, S.P. 1008-113, S.P. 010-596-014,
S.P. 010-596-016, S.P. 010-613-009, S.P. 241-020-003, S.P. 241-090-001

TH 5 RECONSTRUCTION

EROSION CONTROL & TURF ESTABLISHMENT PLANS

SHEET 555 OF 729

0T4M00197_pen.tbl
pdf-B and W.pltcfg
8:40:14 PM
H:\CACO\0T4M00197\CAD\ORD\CACO-0T4M00197\plans\Turf\cd1002124_325tep019.dgn
John.Perkins
5/6/2025

LEGEND

- SEED SOUTHERN SHORTGRASS ROADSIDE
  FERTILIZER TYPE 3
  MULCH MATERIAL TYPE 3
- SEED SOUTHERN TALLGRASS ROADSIDE
  FERTILIZER TYPE 3
  MULCH MATERIAL TYPE 3
- SEED SOUTHERN BOULEVARD
  FERTILIZER TYPE 3
  MULCH MATERIAL TYPE 3
- SEED RESIDENTIAL TURFGRASS
  FERTILIZER TYPE 1
  MULCH MATERIAL TYPE 3
- SEED WET DITCH
  FERTILIZER TYPE 4
  ROLLED EROSION PREVENTION CATEGORY 10
- SEED SOUTHERN TALLGRASS ROADSIDE
  FERTILIZER TYPE 4
  ROLLED EROSION PREVENTION CATEGORY 25
- SEED SOUTHERN SHORTGRASS ROADSIDE
  FERTILIZER TYPE 3
  ROLLED EROSION PREVENTION CATEGORY 25
- SEE LANDSCAPING PLANS
- SEED SOUTHERN TALLGRASS ROADSIDE
  FERTILIZER TYPE 3
  ROLLED EROSION PREVENTION CATEGORY 10
- CP — CULVERT END CONTROLS
- STORM DRAIN INLET PROTECTION
- SURFACE FLOW DIRECTION
- EXISTING RIGHT-OF-WAY
- PROPOSED RIGHT-OF-WAY
- TEMPORARY EASEMENT
- CONSTRUCTION LIMITS
- EXISTING PERMANENT EASEMENT
- PERMANENT EASEMENT
- PARCEL LINE
- MS — SILT FENCE (MACHINE SLICED)
- BR — SEDIMENT CONTROL LOG (SCL) TYPE WOOD FIBER
- AREA OF ENVIRONMENTAL SENSITIVITY

NOTE:

SILT FENCE SHALL FOLLOW, AS CLOSE AS POSSIBLE, TO A SINGLE CONTOUR.

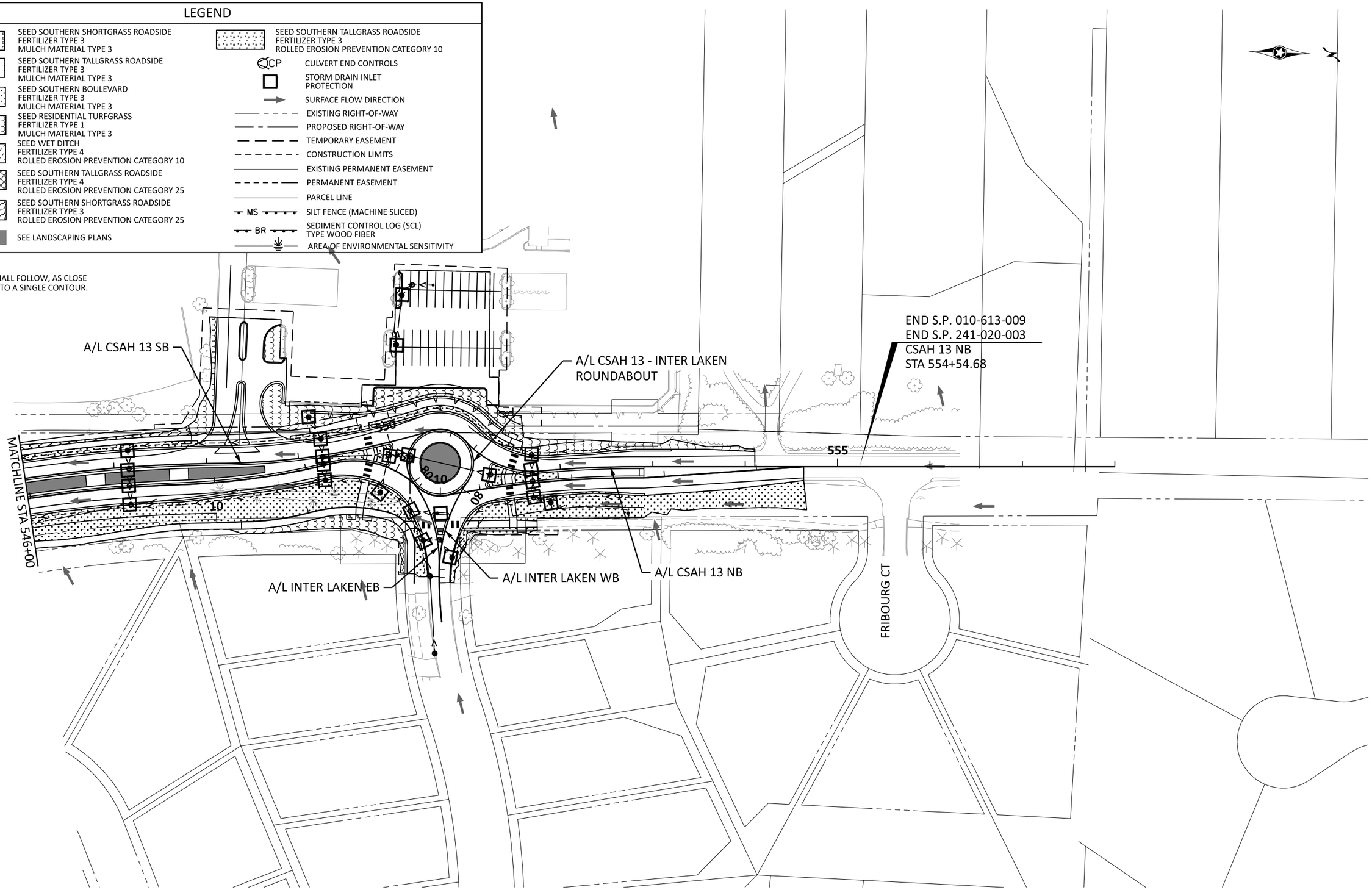

0T4M00197_pen.tbl
H:\CACO\0T4M00197\CAD\ORD\CACO-0T4M000197\plans\Turf\cd1002124_325tep020.dgn
pdf-B and W.pltcfg
8:40:15 PM
John.Perkins
5/6/2025
Default

0 50 100
SCALE FEET

BOLTON & MENK

12224 NICOLLET AVENUE
BURNSVILLE, MINNESOTA 55337
Phone: (952) 890-0509
Email: Burnsville@bolton-menk.com
www.bolton-menk.com

REV.	BY	DATE

I HEREBY CERTIFY THAT THIS PLAN, SPECIFICATION, OR REPORT WAS PREPARED BY ME OR UNDER MY DIRECT SUPERVISION AND THAT I AM A DULY LICENSED PROFESSIONAL ENGINEER UNDER THE LAWS OF THE STATE OF MINNESOTA.

JOHN L. PERKINS
LIC. NO. 56278 DATE 03/14/2025

DESIGNED MMH
DRAWN MMH
CHECKED JLP

S.P. 1002-124, S.P. 1008-113, S.P. 010-596-014,
S.P. 010-596-016, S.P. 010-613-009, S.P. 241-020-003, S.P. 241-090-001

TH 5 RECONSTRUCTION

EROSION CONTROL & TURF ESTABLISHMENT PLANS

LEGEND

- SEED SOUTHERN SHORTGRASS ROADSIDE
  FERTILIZER TYPE 3
  MULCH MATERIAL TYPE 3
- SEED SOUTHERN TALLGRASS ROADSIDE
  FERTILIZER TYPE 3
  MULCH MATERIAL TYPE 3
- SEED SOUTHERN BOULEVARD
  FERTILIZER TYPE 3
  MULCH MATERIAL TYPE 3
- SEED RESIDENTIAL TURFGRASS
  FERTILIZER TYPE 1
  MULCH MATERIAL TYPE 3
- SEED WET DITCH
  FERTILIZER TYPE 4
  ROLLED EROSION PREVENTION CATEGORY 10
- SEED SOUTHERN TALLGRASS ROADSIDE
  FERTILIZER TYPE 4
  ROLLED EROSION PREVENTION CATEGORY 25
- SEED SOUTHERN SHORTGRASS ROADSIDE
  FERTILIZER TYPE 3
  ROLLED EROSION PREVENTION CATEGORY 25
- SEE LANDSCAPING PLANS
- SEED SOUTHERN TALLGRASS ROADSIDE
  FERTILIZER TYPE 3
  ROLLED EROSION PREVENTION CATEGORY 10
- CP — CULVERT END CONTROLS
- STORM DRAIN INLET PROTECTION
- SURFACE FLOW DIRECTION
- EXISTING RIGHT-OF-WAY
- PROPOSED RIGHT-OF-WAY
- TEMPORARY EASEMENT
- CONSTRUCTION LIMITS
- EXISTING PERMANENT EASEMENT
- PERMANENT EASEMENT
- PARCEL LINE
- MS — SILT FENCE (MACHINE SLICED)
- BR — SEDIMENT CONTROL LOG (SCL) TYPE WOOD FIBER
- AREA OF ENVIRONMENTAL SENSITIVITY

NOTE:

SILT FENCE SHALL FOLLOW, AS CLOSE AS POSSIBLE, TO A SINGLE CONTOUR.

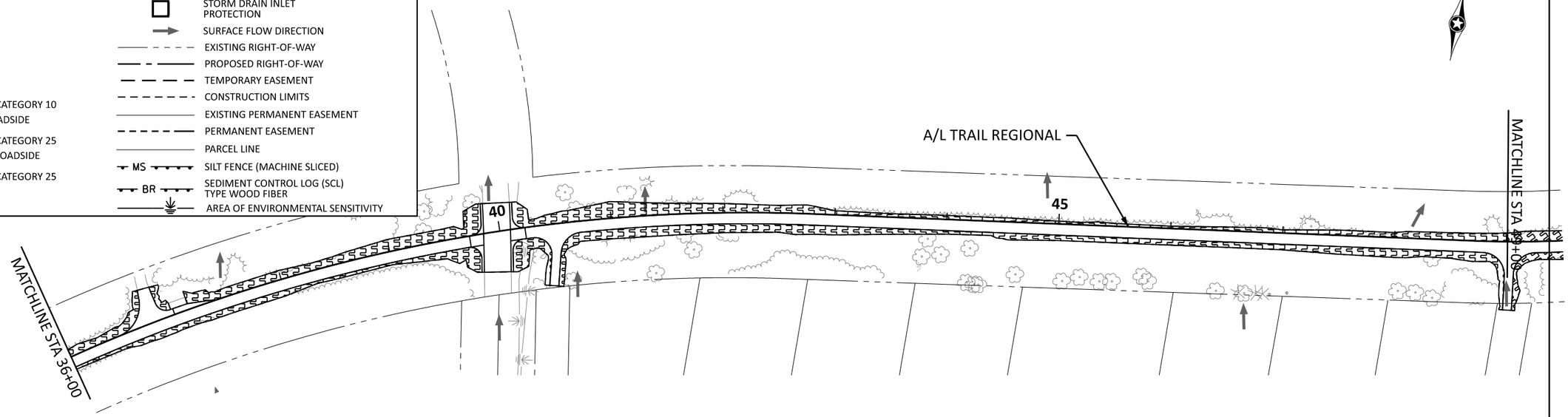

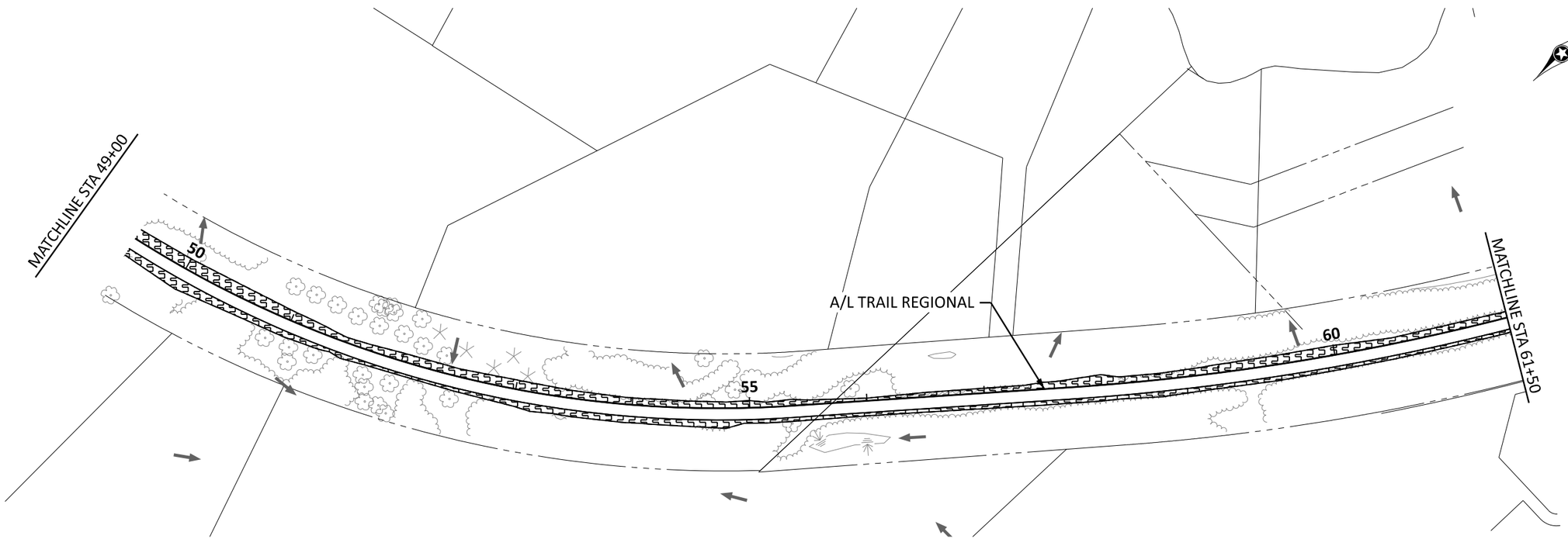

0 50 100
SCALE FEET

BOLTON & MENK
12224 NICOLLET AVENUE
BURNSVILLE, MINNESOTA 55337
Phone: (952) 890-0509
Email: Burnsville@bolton-menk.com
www.bolton-menk.com

REV.	BY	DATE

I HEREBY CERTIFY THAT THIS PLAN, SPECIFICATION, OR REPORT WAS PREPARED BY ME OR UNDER MY DIRECT SUPERVISION AND THAT I AM A DULY LICENSED PROFESSIONAL ENGINEER UNDER THE LAWS OF THE STATE OF MINNESOTA.

JOHN L. PERKINS
LIC. NO. 56278 DATE 03/14/2025

DESIGNED MMH
DRAWN MMH
CHECKED JLP

S.P. 1002-124, S.P. 1008-113, S.P. 010-596-014,
S.P. 010-596-016, S.P. 010-613-009, S.P. 241-020-003, S.P. 241-090-001

TH 5 RECONSTRUCTION

EROSION CONTROL & TURF ESTABLISHMENT PLANS

0T4M00197_pen.tbl
H:\CACO\0T4M00197\CAD\ORD\CACO-0T4M00197\plans\Turf\cd1002124_325tep021.dgn
pdf-B and W.pltcfg
8:40:16 PM
John.Perkins
5/6/2025
Default

LEGEND

- SEED SOUTHERN SHORTGRASS ROADSIDE
  FERTILIZER TYPE 3
  MULCH MATERIAL TYPE 3
- SEED SOUTHERN TALLGRASS ROADSIDE
  FERTILIZER TYPE 3
  MULCH MATERIAL TYPE 3
- SEED SOUTHERN BOULEVARD
  FERTILIZER TYPE 3
  MULCH MATERIAL TYPE 3
- SEED RESIDENTIAL TURFGRASS
  FERTILIZER TYPE 1
  MULCH MATERIAL TYPE 3
- SEED WET DITCH
  FERTILIZER TYPE 4
  ROLLED EROSION PREVENTION CATEGORY 10
- SEED SOUTHERN TALLGRASS ROADSIDE
  FERTILIZER TYPE 4
  ROLLED EROSION PREVENTION CATEGORY 25
- SEED SOUTHERN SHORTGRASS ROADSIDE
  FERTILIZER TYPE 3
  ROLLED EROSION PREVENTION CATEGORY 25
- SEE LANDSCAPING PLANS
- SEED SOUTHERN TALLGRASS ROADSIDE
  FERTILIZER TYPE 3
  ROLLED EROSION PREVENTION CATEGORY 10
- CP — CULVERT END CONTROLS
- STORM DRAIN INLET PROTECTION
- SURFACE FLOW DIRECTION
- EXISTING RIGHT-OF-WAY
- PROPOSED RIGHT-OF-WAY
- TEMPORARY EASEMENT
- CONSTRUCTION LIMITS
- EXISTING PERMANENT EASEMENT
- PERMANENT EASEMENT
- PARCEL LINE
- MS — SILT FENCE (MACHINE SLICED)
- BR — SEDIMENT CONTROL LOG (SCL) TYPE WOOD FIBER
- AREA OF ENVIRONMENTAL SENSITIVITY

NOTE:

SILT FENCE SHALL FOLLOW, AS CLOSE AS POSSIBLE, TO A SINGLE CONTOUR.

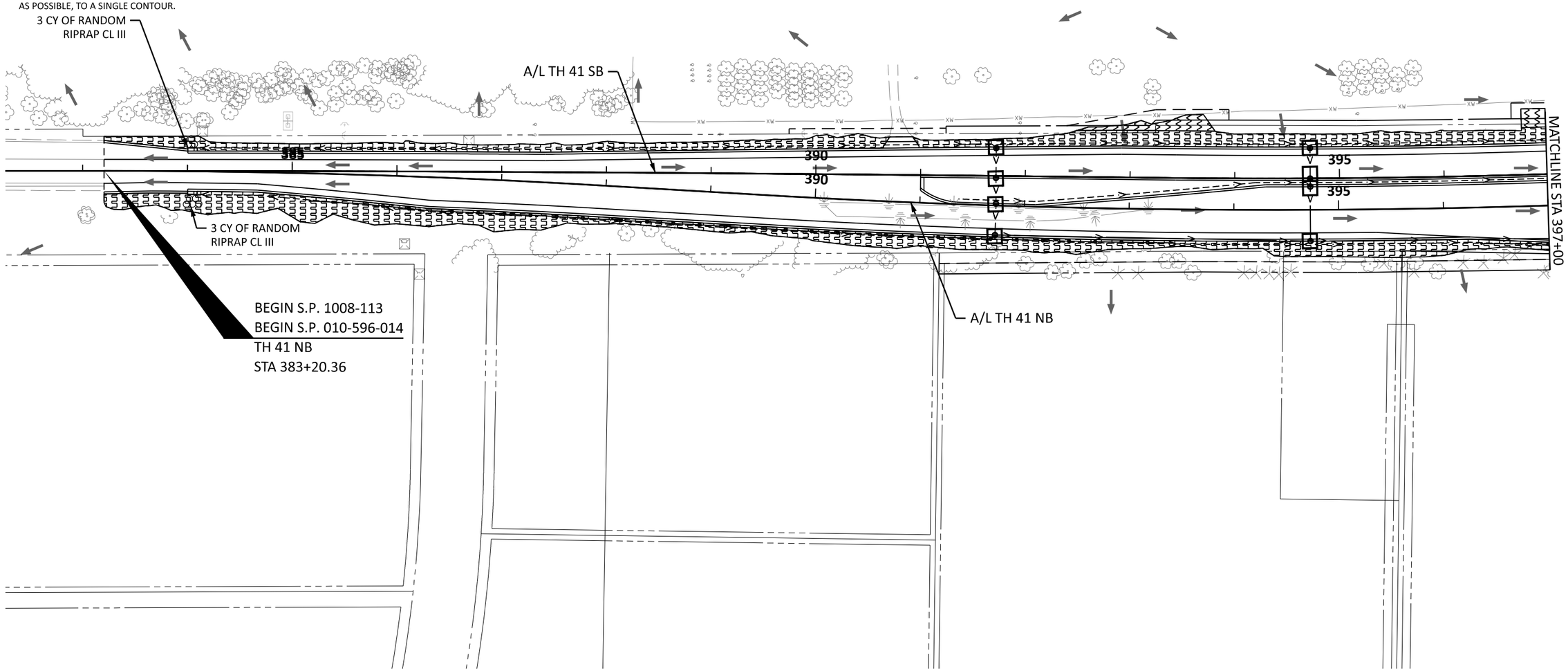

0 50 100
SCALE FEET

BOLTON & MENK
12224 NICOLLET AVENUE
BURNSVILLE, MINNESOTA 55337
Phone: (952) 890-0509
Email: Burnsville@bolton-menk.com
www.bolton-menk.com

REV.	BY	DATE

I HEREBY CERTIFY THAT THIS PLAN, SPECIFICATION, OR REPORT WAS PREPARED BY ME OR UNDER MY DIRECT SUPERVISION AND THAT I AM A DULY LICENSED PROFESSIONAL ENGINEER UNDER THE LAWS OF THE STATE OF MINNESOTA.

JOHN L. PERKINS
LIC. NO. 56278 DATE 03/14/2025

DESIGNED MMH
DRAWN MMH
CHECKED JLP

S.P. 1002-124, S.P. 1008-113, S.P. 010-596-014,
S.P. 010-596-016, S.P. 010-613-009, S.P. 241-020-003, S.P. 241-090-001

TH 5 RECONSTRUCTION

EROSION CONTROL & TURF ESTABLISHMENT PLANS

0T4M00197_pen.tbl
pdf-B and W.pltcfg H:\CACO\0T4M00197\CAD\ORD\CACO-0T4M00197\plans\Turf\cd1002124_325tep022.dgn
8:40:27 PM
John.Perkins
5/6/2025
Default

LEGEND

- SEED SOUTHERN SHORTGRASS ROADSIDE
  FERTILIZER TYPE 3
  MULCH MATERIAL TYPE 3
- SEED SOUTHERN TALLGRASS ROADSIDE
  FERTILIZER TYPE 3
  MULCH MATERIAL TYPE 3
- SEED SOUTHERN BOULEVARD
  FERTILIZER TYPE 3
  MULCH MATERIAL TYPE 3
- SEED RESIDENTIAL TURFGRASS
  FERTILIZER TYPE 1
  MULCH MATERIAL TYPE 3
- SEED WET DITCH
  FERTILIZER TYPE 4
  ROLLED EROSION PREVENTION CATEGORY 10
- SEED SOUTHERN TALLGRASS ROADSIDE
  FERTILIZER TYPE 4
  ROLLED EROSION PREVENTION CATEGORY 25
- SEED SOUTHERN SHORTGRASS ROADSIDE
  FERTILIZER TYPE 3
  ROLLED EROSION PREVENTION CATEGORY 25
- SEE LANDSCAPING PLANS
- SEED SOUTHERN TALLGRASS ROADSIDE
  FERTILIZER TYPE 3
  ROLLED EROSION PREVENTION CATEGORY 10
- CP — CULVERT END CONTROLS
- STORM DRAIN INLET PROTECTION
- SURFACE FLOW DIRECTION
- EXISTING RIGHT-OF-WAY
- PROPOSED RIGHT-OF-WAY
- TEMPORARY EASEMENT
- CONSTRUCTION LIMITS
- EXISTING PERMANENT EASEMENT
- PERMANENT EASEMENT
- PARCEL LINE
- MS — SILT FENCE (MACHINE SLICED)
- BR — SEDIMENT CONTROL LOG (SCL) TYPE WOOD FIBER
- AREA OF ENVIRONMENTAL SENSITIVITY

NOTE:

SILT FENCE SHALL FOLLOW, AS CLOSE AS POSSIBLE, TO A SINGLE CONTOUR.

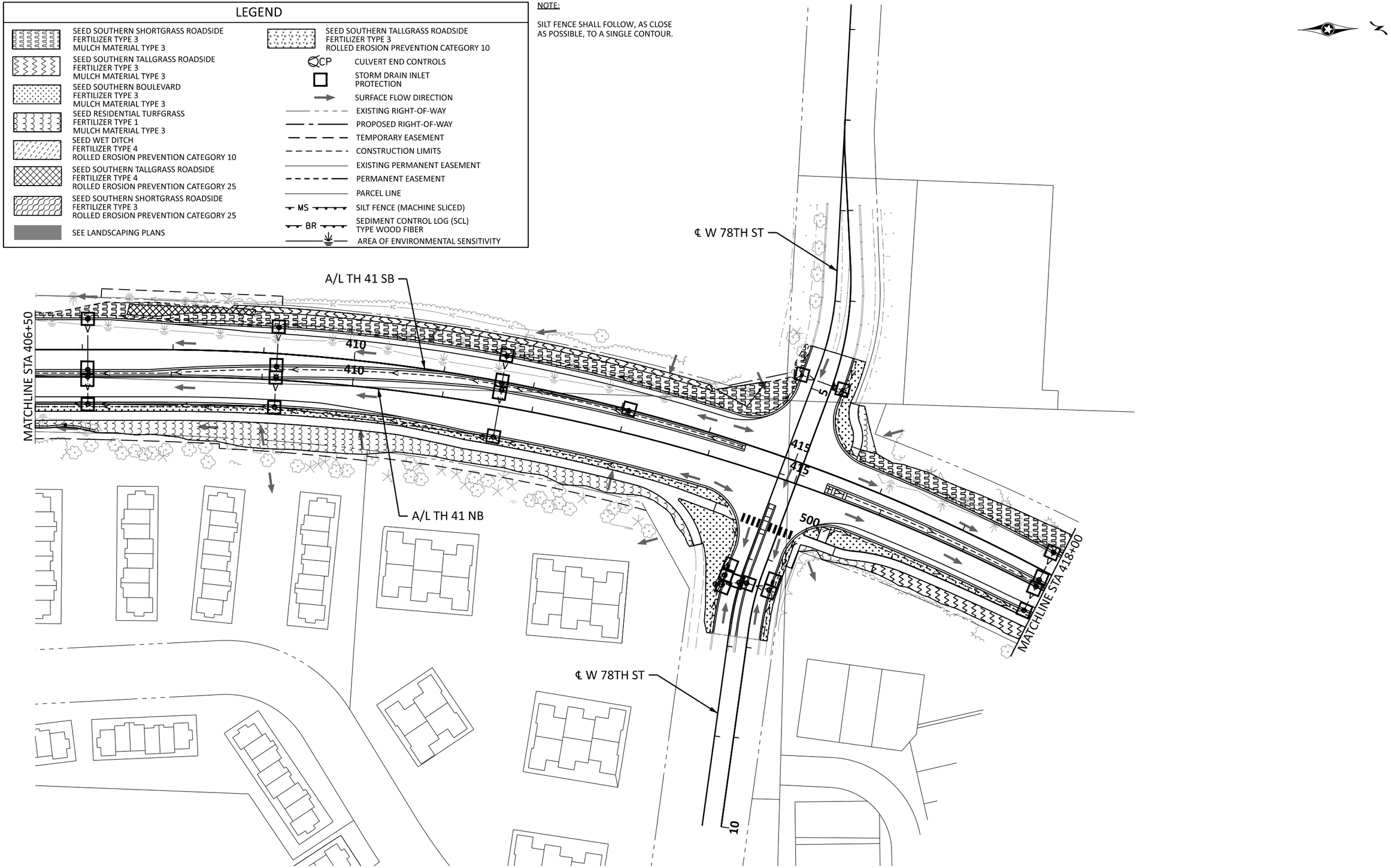

0 50 100
SCALE FEET

Default

BOLTON & MENK
12224 NICOLLET AVENUE
BURNSVILLE, MINNESOTA 55337
Phone: (952) 890-0509
Email: Burnsville@bolton-menk.com
www.bolton-menk.com

REV.	BY	DATE

I HEREBY CERTIFY THAT THIS PLAN, SPECIFICATION, OR REPORT WAS PREPARED BY ME OR UNDER MY DIRECT SUPERVISION AND THAT I AM A DULY LICENSED PROFESSIONAL ENGINEER UNDER THE LAWS OF THE STATE OF MINNESOTA.

JOHN L. PERKINS
LIC. NO. 56278 DATE 03/14/2025

DESIGNED MMH
DRAWN MMH
CHECKED JLP

S.P. 1002-124, S.P. 1008-113, S.P. 010-596-014,
S.P. 010-596-016, S.P. 010-613-009, S.P. 241-020-003, S.P. 241-090-001

TH 5 RECONSTRUCTION

EROSION CONTROL & TURF ESTABLISHMENT PLANS

John.Perkins 5/6/2025
pdf-B and W.pltcfg 8:40:28 PM
0T4M00197_pen.tbl
H:\CACO\0T4M00197\CAD\ORD\CACO-0T4M00197\plans\Turf\cd1002124_325tep023.dgn

LEGEND

- SEED SOUTHERN SHORTGRASS ROADSIDE
  FERTILIZER TYPE 3
  MULCH MATERIAL TYPE 3
- SEED SOUTHERN TALLGRASS ROADSIDE
  FERTILIZER TYPE 3
  MULCH MATERIAL TYPE 3
- SEED SOUTHERN BOULEVARD
  FERTILIZER TYPE 3
  MULCH MATERIAL TYPE 3
- SEED RESIDENTIAL TURFGRASS
  FERTILIZER TYPE 1
  MULCH MATERIAL TYPE 3
- SEED WET DITCH
  FERTILIZER TYPE 4
  ROLLED EROSION PREVENTION CATEGORY 10
- SEED SOUTHERN TALLGRASS ROADSIDE
  FERTILIZER TYPE 4
  ROLLED EROSION PREVENTION CATEGORY 25
- SEED SOUTHERN SHORTGRASS ROADSIDE
  FERTILIZER TYPE 3
  ROLLED EROSION PREVENTION CATEGORY 25
- SEE LANDSCAPING PLANS
- SEED SOUTHERN TALLGRASS ROADSIDE
  FERTILIZER TYPE 3
  ROLLED EROSION PREVENTION CATEGORY 10
- CP — CULVERT END CONTROLS
- STORM DRAIN INLET PROTECTION
- SURFACE FLOW DIRECTION
- EXISTING RIGHT-OF-WAY
- PROPOSED RIGHT-OF-WAY
- TEMPORARY EASEMENT
- CONSTRUCTION LIMITS
- EXISTING PERMANENT EASEMENT
- PERMANENT EASEMENT
- PARCEL LINE
- MS — SILT FENCE (MACHINE SLICED)
- BR — SEDIMENT CONTROL LOG (SCL) TYPE WOOD FIBER
- AREA OF ENVIRONMENTAL SENSITIVITY

NOTE:

SILT FENCE SHALL FOLLOW, AS CLOSE AS POSSIBLE, TO A SINGLE CONTOUR.

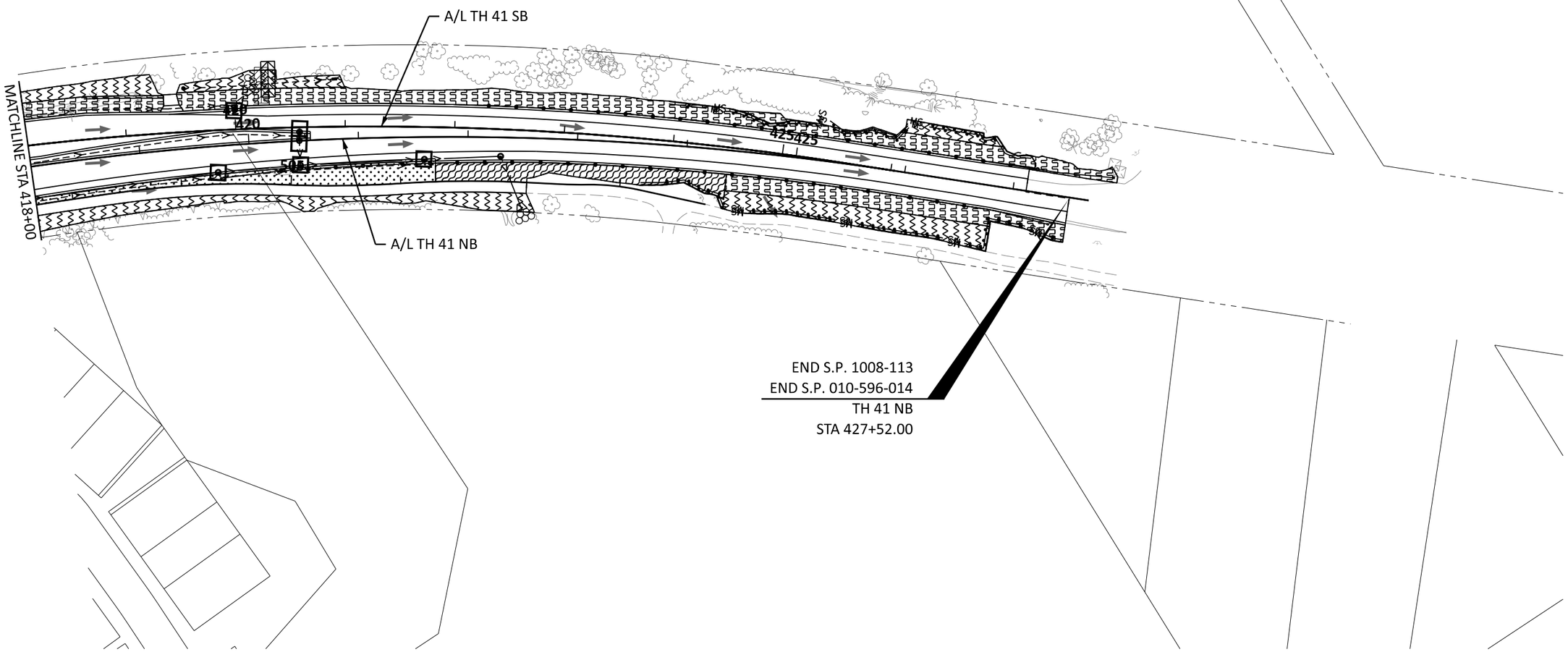

0 50 100
SCALE FEET

Default

BOLTON & MENK
12224 NICOLLET AVENUE
BURNSVILLE, MINNESOTA 55337
Phone: (952) 890-0509
Email: Burnsville@bolton-menk.com
www.bolton-menk.com

REV.	BY	DATE

I HEREBY CERTIFY THAT THIS PLAN, SPECIFICATION, OR REPORT WAS PREPARED BY ME OR UNDER MY DIRECT SUPERVISION AND THAT I AM A DULY LICENSED PROFESSIONAL ENGINEER UNDER THE LAWS OF THE STATE OF MINNESOTA.

JOHN L. PERKINS
LIC. NO. 56278 DATE 03/14/2025

DESIGNED MMH
DRAWN MMH
CHECKED JLP

S.P. 1002-124, S.P. 1008-113, S.P. 010-596-014,
S.P. 010-596-016, S.P. 010-613-009, S.P. 241-020-003, S.P. 241-090-001

TH 5 RECONSTRUCTION

EROSION CONTROL & TURF ESTABLISHMENT PLANS

John.Perkins 5/6/2025
pdf-B and W.pltcfg 8:40:29 PM
H:\CACO\0T4M00197\CAD\ORD\CACO-0T4M00197\plans\Turf\cd1002124_325tep024.dgn
0T4M00197_pen.tbl

STORM WATER POLLUTION PREVENTION PLAN (SWPPP)

(NPDES PERMIT IS REQUIRED ON THIS PROJECT)

PROJECT NAME/LOCATION

The project is located on Trunk Highway 5 (TH 5) from 0.08 miles east of CSAH 11 to 0.29 miles east of TH 41; Trunk Highway 41 from 0.33 miles south of TH 5 to 0.49 miles north of TH 5; and on County State Aid Highway 13 (CSAH 13) from 0.05 miles north of CSAH 18 to 0.39 miles south of TH 7. It spans in the City of Chanhassen and the City of Victoria in Carver County.
Latitude: 44.867 Longitude: -93.627 (from Digital Raster Graphic Topo 7.5-minute) Zip Code(s): 55386, 55317.

ENVIRONMENTAL REVIEW

There are no stormwater mitigation measures required as a result of an environmental, archeological or agency review. All mitigation measures have been addressed in this plan set or the special provisions. The project is located in a well head protection area or Drinking Water Supply Management Area (DWSMA) with a Low vulnerability.

PROJECT DESCRIPTION/NARRATIVE

The intent of this project is to provide efficient and reliable vehicle mobility, safely accommodate all sytem users, provide a comprehensive network for pedestrians and bicylists, and ensure infrastrucure improvements respect the natural environment.

LONG TERM MAINTENANCE AND OPERATION

Carver County & MnDOT maintenance staff are responsible for the long term maintenance and operation of the permanent stormwater system.

PROJECT CONTACTS

The project engineer and contractor are responsible for implementation of the SWPPP and installation, inspection, and maintenance of the erosion prevention and sediment control BMPs before, during and after construction until the Notice of Termination (NOT) has been submitted with the Minnesota Pollution Control Agency (MPCA).

ORGANIZATION	CONTACT NAME	PHONE
SWPPP Designer (Bolton & Menk, Inc.)	John Perkins	612-759-7039
Contractor's Erosion & Sediment Control Supervisor		
Contractor's Erosion & Sediment Control Installer		
Carver County	Darin Mielke	952-466-5200
City of Victoria	Cara Geheren	651-300-4261
MnDOT Water Resources Project Engineer	Hailu Shekur	651-234-5721
Minnesota Pollution Control Agency (MPCA)	Josh Norman	651-757-2389
Minnehaha Creek Watershed District	Maggie Menden	952-641-4586

MPCA 24 HOUR EMERGENCY NOTIFICATION: 651-649-5451 TOLL FREE: 800-422-0798

EROSION CONTROL SUPERVISOR

In accordance with spec. 2573.3 A.1 the contractor shall provide an Erosion Control Supervisor with a valid certification to direct the contractor and subcontractors operations and insure compliance with federal, state and local ordinances and regulations. The Erosion Control Supervisor will work with the project engineer to oversee the implementation of the SWPPP and the installation, inspection, and maintenance and repair of the erosion prevention and sediment control BMPs before, during and after construction until the NOT has been filed with the MPCA.

The Erosion Control Supervisor is responsible for complying with all the inspection and maintenance requirements stated in the NPDES permit. Inspections of the entire construction site will occur a minimum of once every seven days during active construction and within 24 hours after a rainfall event greater than 0.5 inches in 24 hours. The Erosion Control Supervisor will oversee inspection of all erosion prevention and sediment control BMPs to ensure integrity and effectiveness of each BMP. All inspections and maintenance conducted during construction must be recorded in writing (within 24 hrs.) and these records must become part of the SWPPP. Inspection reports must be submitted to the project engineer in a format that meets or exceeds the project engineer's expectations. Records of each inspection and maintenance activity shall include:

A. Date and time of inspections;
B. Name of persons conducting inspections;
C. Findings of inspections, including specific locations where corrective actions are needed;
D. Corrective actions taken, including dates, times, and party completing maintenance activities;
E. Date and amount of all rainfall events greater than 0.5 inch in 24 hours;
F. Photograph and description of discharge (i.e. color, odor, floating, settled or suspended solids, foam, oil sheen,etc.); and
G. Documents and changes made to the SWPPP.

Rainfall amounts must be obtained by a properly maintained rain gage on site, a weather station within 1 mile of site, or a weather reporting system that provides site specific rainfall data from radar summaries.

LOCATION OF SWPPP REQUIREMENTS

The required SWPPP elements are located in several places within the plan set as well as in the special provisions and MnDOT spec book (2020 edition). The notes and table below are a quick reference for the contractor and project engineer to use in the field. There may be additional required SWPPP elements included on the project that are not listed on this sheet.

SWPPP TRAINING

This SWPPP was prepared by personnel certified, or under the supervision of someone certified, in the design of construction SWPPPs. Copies of the certifications are on file with Carver County and are available upon request. The contractor is responsible for providing an erosion control supervisor with valid certification that is responsible for overseeing the implementation of the SWPPP. The contractor must provide proof of certification at the preconstruction meeting and will not be allowed to commence work until proof of certification has been provided to the project engineer.

LOCATION OF SWPPP REQUIREMENTS IN PROJECT PLAN

DESCRIPTION	LOCATION
SITE MAP & EROSION CONTROL SHEETS	SHEETS NO. 537 - 560
DIRECTION OF FLOW	SHEETS NO. 430 - 453
FINAL STABILIZATION	SHEETS NO. 537 - 560
SOILS AND CONSTRUCTION NOTES	SHEETS NO. 37
DRAINAGE PLAN/PROFILE SHEETS	SHEETS NO. 430 - 511
DRAINAGE TABULATION	SHEETS NO. 512 - 514
EROSION AND SEDIMENT CONTROL DETAILS	SHEETS NO. 37
EROSION CONTROL TABULATION	SHEETS NO. 62
TURF ESTABLISHMENT TABULATION	SHEETS NO. 63 - 64

PROJECT WATERBODIES

The following waterbodies are located within one mile of the project limits and receive runoff from the project site. If any of the waterbodies are special or impaired waters, the BMPs described in Section 23 of the NPDES permit will apply to all areas of the site. Approved TMDL implementation plans are also listed.

NAME	TYPE	SPECIAL?	IMPAIRED?	APPROVED TMDL?
STEIGER LAKE	LAKE	NO	YES	NO
SCHUTZ LAKE	LAKE	NO	NO	NO
TAMARACK LAKE	LAKE	NO	NO	NO
LAKE SAINT JOE	LAKE	NO	NO	NO
LAKE MINNEWASHTA	LAKE	NO	YES	YES, Hg-F

No work shall occur within the banks of DNR designated Public Waters between March 1 and June 15. Stabilization of soils within 200 feet of the waters edge must be completed within 24 hours during this period.

STORMWATER CONTROLS AND PRECIPITATION

The contractor must plan and implement BMPs to protect receiving waters. The average annual rainfall amount for the project area is 33.2 inches. Average 2-year and 10-year rainfall intensities are 3.72 in/hr and 5.60 in/hr respectively, assuming a Time of Concentration of 10 minutes.

LAND FEATURE CHANGES

Total disturbed area: 100.8 acres
Total existing impervious surface area: 46.7 acres
Total post construction impervious surface area: 59.4 acres
Total proposed net change in impervious surface area: 12.7 acres

ADDITIONAL SWPPP REQUIREMENTS

-Timing for Installation is described in General SWPPP notes and are specified relative to contractor schedule.
-BMP Design Factors are incorporated in the design of BMP Standard Detail Sheets.
-Soil Management:
Soil types typically found on this project are primarily clayey sand, and lean clay
Grading Projects: subsoiling and seeding practices will be done to mitigate for compaction and disturbance beyond road core.
-All MPCA Construction Activity Requirements are incorporated into this SWPPP and associated plan documents.

UNIVERSITY OF MINNESOTA
John Perkins
Design of Construction SWPPP (May 31 2025)

BOLTON & MENK
12224 NICOLLET AVENUE
BURNSVILLE, MINNESOTA 55337
Phone: (952) 890-0509
Email: Burnsville@bolton-menk.com
www.bolton-menk.com

REV.	BY	DATE

I HEREBY CERTIFY THAT THIS PLAN, SPECIFICATION, OR REPORT WAS PREPARED BY ME OR UNDER MY DIRECT SUPERVISION AND THAT I AM A DULY LICENSED PROFESSIONAL ENGINEER UNDER THE LAWS OF THE STATE OF MINNESOTA.

JOHN L. PERKINS
LIC. NO. 56278 DATE 03/14/2025

DESIGNED GMG
DRAWN MMH
CHECKED JLP

S.P. 1002-124, S.P. 1008-113, S.P. 010-596-014, S.P. 010-596-016, S.P. 010-613-009, S.P. 241-020-003, S.P. 241-090-001
TH 5 RECONSTRUCTION
STORM WATER POLLUTION PREVENTION PLAN

STORM WATER POLLUTION PREVENTION PLAN (SWPPP) (CONTINUED)

GENERAL SWPPP NOTES FOR CONSTRUCTION ACTIVITY

1. Construction shall be governed by the 2023 NPDES Construction Stormwater Permit, MnDOT Spec Book (2020 Edition), project plans, and special provisions. Reference special provision 1717 for additional MPCA NPDES requirements. The contractor will develop a chain of command with all operators on the site to ensure that the SWPPP will be implemented and stay in effect until the construction project is complete, the entire site has undergone final stabilization, and the NOT has been submitted.

2. The contractor will prepare a written, weekly schedule of proposed erosion control activities for the Project Engineer's approval as per MnDOT Spec 1717.2B.

3. The contractor will prepare and submit a site plan for the Engineer's approval as per MnDOT Spec 1717.2C for concrete management, work in environmentally sensitive areas, areas identified in the plans as "site plan requirement area", any work that will require dewatering, the staging of inlet protection devices over the life of the contract, and as requested by the engineer. All site plans must be submitted to the engineer in writing. The contractor shall allow a minimum of 7 days for Carver County to review and approve site plan submittals. The contractor will not be allowed to commence work for which a site plan is required until approval has been granted by the engineer. The contractor will not be given any extra time in the contract due to the untimely submittal of a site plan.

4. The contractor will comply with the requirements regarding pollution prevention management during construction, which will include, but not be limited to:
   - A. Concrete (including stucco, paint, form release oils, curing compounds, and other construction materials) washouts are not allowed on site. An engineered collection system can also be used if it is approved by the project engineer. Liquid and solid waste must be disposed of properly and in compliance with all MPCA regulations.
   - B. Solid waste including, but not limited to, collected sediment, asphalt and concrete millings, floating debris, paper, plastic, fabric, construction and demolition debris, and other wastes, must be disposed of properly and in compliance with MPCA disposal requirements.
   - C. Fuel tanks are not allowed on site. Hazardous waste, such as, oil, gasoline, paint, and other hazardous substances, must be properly stored, including secondary containment, to prevent spills, leaks, or other discharge. Restricted access to storage areas must be provided to prevent vandalism. Storage and disposal of hazardous waste must be in compliance with MPCA regulations.
   - D. External washing of trucks and other construction vehicles is not allowed on site. Engine degreasing is not allowed on site.
   - E. Chemical spill kits must be available on site at all times.
   - F. Portable restroom facilities must be anchored to prevent tipping.

5. Chemicals must be kept in a secure storage area when not in use. Chemical storage containers must have secondary containment when being used or stored on the project site. Chemical spills of any kind (oil, fuel, fertilizer, etc.) must be cleaned up and removed from the site immediately.

6. The contractor is responsible for creating and following a written disposal plan for all waste materials, and submitting the plan to the engineer. The plan will include how the material will be disposed of and the location of the disposal site.

7. Burning of any material is not allowed within project boundary.

8. The erosion prevention and sediment control BMPs shall be placed as necessary to minimize erosion from disturbed surfaces and to capture sediment onsite. All erosion control measures shall be in place prior to starting any removal work and/or ground disturbing activities and shall be maintained until temporarily or permanently stabilized.

9. Sediment control devices must be established on all down gradient perimeters before any up gradient land disturbing activities begin.

10. Storm sewer inlets will be protected at all times with the appropriate inlet protection for each specific phase of construction. Inlet protection devices may need to be placed multiple times in the same location over the life of the contract. Inlet protection devices will be paid for once per inlet regardless of the number of times the BMP is placed. All storm sewer inlet protection devices will be kept in good functional condition at all times. If the project engineer deems an inlet protection device to be nonfunctional, in poor condition, ineffective, or not appropriate for the current construction activities it will be replaced with a suitable alternative at no cost to Carver County.

11. The contractor will place construction exits, as necessary, to prevent tracking of sediment onto paved surfaces and in compliance with Section 9 of the NPDES permit. Construction exits will be sufficiently sized and maintained to prevent track out. Type 5 mulch (slash mulch) or an approved engineered product will be allowed for construction exits in lieu of crushed rock.

12. All stormwater, including dewatering, must be discharged in a manner that does not cause nuisance conditions or erosion in receiving channels, downslope properties or inundation in wetlands causing an adverse impact to the wetland as determined by the engineer.

13. Backfill placed in streams shall consist of rock or granular material free of fines, silts, and mud. Machinery shall be cleaned of all such material and free of grease, oil, etc. before entering the stream.

14. Slopes steeper than 1:3 (V:H) and greater than 75' in length shall be temporarily or permanently stabilized in increments not to exceed 75' in length prior to constructing or disturbing a new increment. If temporary or permanent stabilization is not feasible at a particular site, a sediment basin or other approved sediment control measure will be allowed as approved by the engineer.

15. Land disturbance and removal of riparian (streamside) vegetation shall be minimized.

16. All exposed soil areas must be temporarily or permanently stabilized no more than 14 days (7 days if within 1 mile of and draining to a special or impaired water) after construction activity on that portion of the site has temporarily or permanently ceased. Stabilization must be initiated immediately. In many instances, this will require stabilization to occur more than once during rough grading. Rapid stabilization methods 1, 2, 3 or 4 will be used to provide temporary cover, as appropriate, in these areas.

17. All temporary or permanent drainage ditches or swales that drain water from the construction site or divert water around the construction site must be stabilized to top of bank within 200 lineal feet from the property edge or point of discharge to any surface water. Stabilization must occur within 24 hours of connection to surface water, existing gutter, storm sewer inlet, drainage ditch, or other stormwater conveyance system according to MnDOT Spec 1717.2. Rapid stabilization Method 4 will be used to stabilize these areas. The remainder of the ditch must be stabilized within 14 days (7 days if within 1 mile of and draining to a special or impaired water) of connecting to the surface water. Permanent erosion control blanket or rapid stabilization Method 4 will be used to stabilize these areas. Disc anchored mulch and hydraulic soil stabilizers are not allowed to be used for permanent ditch stabilization.

18. Outlets shall be permanently or temporarily stabilized with energy dissipation within 24 hours of being constructed.

19. All exposed soil areas will be stabilized prior to the onset of winter. Any work still being performed will be snow mulched, seeded, or blanketed within the time frames indicated in the NPDES permit.

20. The contractor shall comply with the following inspection and maintenance requirements:
   - A. Perimeter control devices must be repaired, replaced, or supplemented when it becomes non-functional or sediment reaches 1/2 the height of the device. Repairs must be made within 24 hours of discovery.
   - B. Inlet protection devices should be repaired when they become non-functional or sediment reaches 1/3 the height and/or depth of the device.
   - C. Temporary and permanent sediment basins must be drained and have the sediment removed once the sediment has reached 1/2 the storage volume within 72 hours of discovery.
   - D. Tracked sediment must be removed within 24 hours of discovery of tracking onto paved surfaces.
   - E. All other non-functional BMPs must be repaired, replaced, or supplemented within 24 hours of discovery.
   - F. Contractor is responsible for maintaining all BMPs until all soil disturbing work has been completed, site has gone under final stabilization, and the NOT has been submitted.

21. If sediment deposits in a surface water (including drainage ditches and conveyance systems), the material must be removed within 7 days.

22. Pavement surfaces shall be swept within 24 hours of discovery of sediment or tracking onto pavement that drains to curbs, inlets, ditches, or ponds. Pavement shall be lightly wetted prior to sweeping.

23. Temporary dewatering activities may be required for roadway construction and utility work.

24. Final stabilization requires that:
   - A. All soil disturbing activities at the site have been completed.
   - B. All soils have been stabilized by a uniform perennial cover with a density of 70% or other equivalent means to prevent soil failure under erosive conditions.
     - C. All accumulated sediment has been removed from permanent water quality basins.
     - D. The permanent stormwater management system has been constructed and is operating as designed.
     - E. All temporary synthetic and structural erosion prevention and sediment control BMPs have been removed.

25. The size and elevation of storm sewer pipes, inlets and overflow devices have been specifically designed to conform to MnDOT design standards, MPCA and watershed district permit requirements. Changing flow directions, quantities, or patterns is not permitted. Any changes to the size, elevation or direction of flow of the drainage system must be approved by the hydraulics engineer.

26. Filing of the NOT is completed electronically through the MPCA permitting webpage. When the project has met the requirements for submission of the NOT, notify the Carver County Highway Department to coordinate the process.

27. Temporary soil stockpiles must have silt fence or other effective perimeter control. Soil stock piles must be covered with mulch or other BMP if left in place for more than 7 days (incidental).

28. Filtration basins may be used as temporary sedimentation basins when they have been rough graded. They cannot be used for temporary sedimentation after filtration media has been installed in the basin bottoms.

Note: information on this sheet is available in the permit and is not intended to be all inclusive. Modifications from the permit will be underlined for quick identification.

SWPPP SITE & SOILS MAP

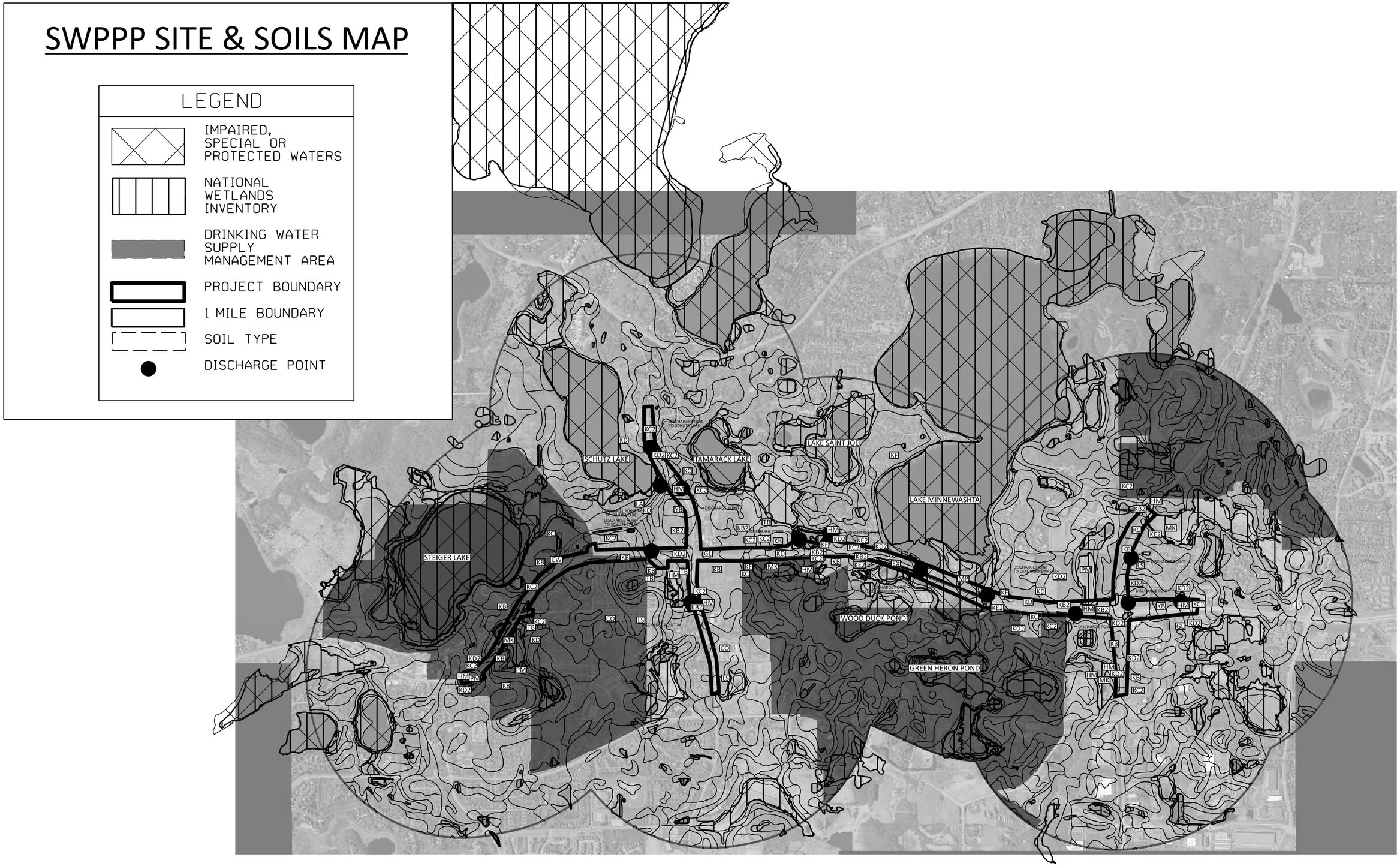

BOLTON & MENK
12224 NICOLLET AVENUE
BURNSVILLE, MINNESOTA 55337
Phone: (952) 890-0509
Email: Burnsville@bolton-menk.com
www.bolton-menk.com

REV.	BY	DATE

I HEREBY CERTIFY THAT THIS PLAN, SPECIFICATION, OR REPORT WAS PREPARED BY ME OR UNDER MY DIRECT SUPERVISION AND THAT I AM A DULY LICENSED PROFESSIONAL ENGINEER UNDER THE LAWS OF THE STATE OF MINNESOTA.

JOHN L. PERKINS
LIC. NO. 56278 DATE 03/14/2025

DESIGNED GMG
DRAWN MMH
CHECKED JLP

S.P. 1002-124, S.P. 1008-113, S.P. 010-596-014, S.P. 010-596-016, S.P. 010-613-009, S.P. 241-020-003, S.P. 241-090-001

TH 5 RECONSTRUCTION

STORM WATER POLLUTION PREVENTION PLAN

John.Perkins 5/6/2025 8:41:19 PM pdf-B and W.pltcfg 0T4M00197_pen.tbl
H:\CACO\0T4M00197\CAD\ORD\CACO-0T4M00197\plans\SWPPP\cd1002124_SWP003.dgn
Default

LEGEND

XXXX	DRAINAGE STRUCTURE NUMBER
	SURFACE FLOW DIRECTION
	PROPOSED/INPLACE APRON
	PROPOSED/INPLACE MANHOLE STRUCTURE
	PROPOSED/INPLACE CATCH BASIN STRUCTURE
	PROPOSED STORM SEWER AND/OR CULVERT
	PROPOSED 4" PERF TP PIPE DRAIN (UNLESS NOTED)
	INPLACE STORM SEWER AND/OR CULVERT
	RANDOM RIPRAP CL III (UNLESS NOTED)
	EXISTING RIGHT-OF-WAY
	PROPOSED RIGHT-OF-WAY
	TEMPORARY EASEMENT
	CONSTRUCTION LIMITS
	PROPOSED PERMANENT EASEMENT
	PARCEL LINE
	AREA OF ENVIRONMENTAL SENSITIVITY
1	CONNECT INTO EXISTING DRAINAGE STRUCTURE
2	CONNECT TO EXISTING STORM SEWER
3	ADJUST FRAME & RING CASTING

SPECIFIC NOTES:

A STRUCTURE TO INCLUDE SUMP AND STRUCTURAL POLLUTION CONTROL DEVICE (INCIDENTAL). SEE DRAINAGE DETAILS.

STRUCTURES ON THIS SHEET

STRUCTURE NO.	PROFILE SHEET NO.	STRUCTURE NO.	PROFILE SHEET NO.	STRUCTURE NO.	PROFILE SHEET NO.
5000	454	5023	457	5001A	454
5001	454	5024	456	5001B	454
5002	457	5025	454	5002A	457
5003	454	5026	457	5004A	455
5004	455	5027	454	5006A	455
5005	455	5028	455	5008A	456
5006	455	5029	455	5009A	456
5007	455	5030	456	5019A	456
5008	456	5031	456	5019B	454
5009	456	5032	456	5019C	456
5010	456	5039	456	5025A	457
5011	457	6000	454	5025B	454
5018	454	6001	460	5025C	454
5019	456	6002	456	5031A	456
5020	456	6005	454	5031B	456
5021	456	6007	455	5031C	456
5022	454	6008	454		

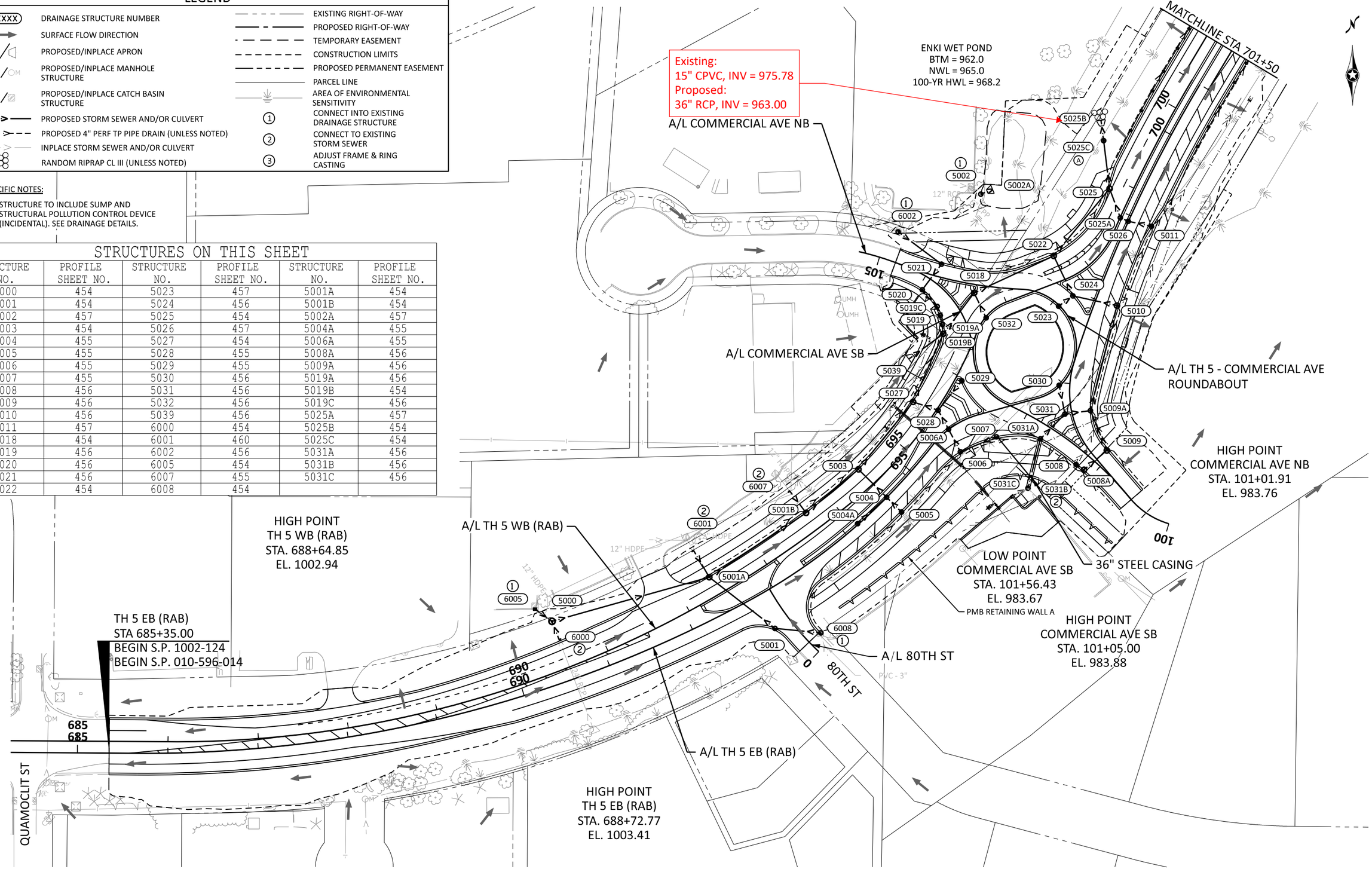

0 50 100
SCALE FEET

BOLTON & MENK
12224 NICOLLET AVENUE
BURNSVILLE, MINNESOTA 55337
Phone: (952) 890-0509
Email: Burnsville@bolton-menk.com
www.bolton-menk.com

REV.	BY	DATE

I HEREBY CERTIFY THAT THIS PLAN, SPECIFICATION, OR REPORT WAS PREPARED BY ME OR UNDER MY DIRECT SUPERVISION AND THAT I AM A DULY LICENSED PROFESSIONAL ENGINEER UNDER THE LAWS OF THE STATE OF MINNESOTA.

JOHN L. PERKINS
LIC. NO. 56278 DATE 03/14/2025

DESIGNED GMG
DRAWN MMH
CHECKED JLP

S.P. 1002-124, S.P. 1008-113, S.P. 010-596-014, S.P. 010-596-016, S.P. 010-613-009, S.P. 241-020-003, S.P. 241-090-001

TH 5 RECONSTRUCTION

DRAINAGE PLANS

0T4M00197_pen.tbl
pdf-B and W.pltcfg 11:18:56 AM H:\CACO\0T4M00197\CAD\ORD\CACO-0T4M00197\plans\Drainage\cd1002124_300drp001.dgn
John.Perkins 7/3/2025
Default

LEGEND

XXXX	DRAINAGE STRUCTURE NUMBER
	SURFACE FLOW DIRECTION
	PROPOSED/INPLACE APRON
	PROPOSED/INPLACE MANHOLE STRUCTURE
	PROPOSED/INPLACE CATCH BASIN STRUCTURE
	PROPOSED STORM SEWER AND/OR CULVERT
	PROPOSED 4" PERF TP PIPE DRAIN (UNLESS NOTED)
	INPLACE STORM SEWER AND/OR CULVERT
	RANDOM RIPRAP CL III (UNLESS NOTED)
	EXISTING RIGHT-OF-WAY
	PROPOSED RIGHT-OF-WAY
	TEMPORARY EASEMENT
	CONSTRUCTION LIMITS
	PROPOSED PERMANENT EASEMENT
	PARCEL LINE
	AREA OF ENVIRONMENTAL SENSITIVITY
1	CONNECT INTO EXISTING DRAINAGE STRUCTURE
2	CONNECT TO EXISTING STORM SEWER
3	ADJUST FRAME & RING CASTING

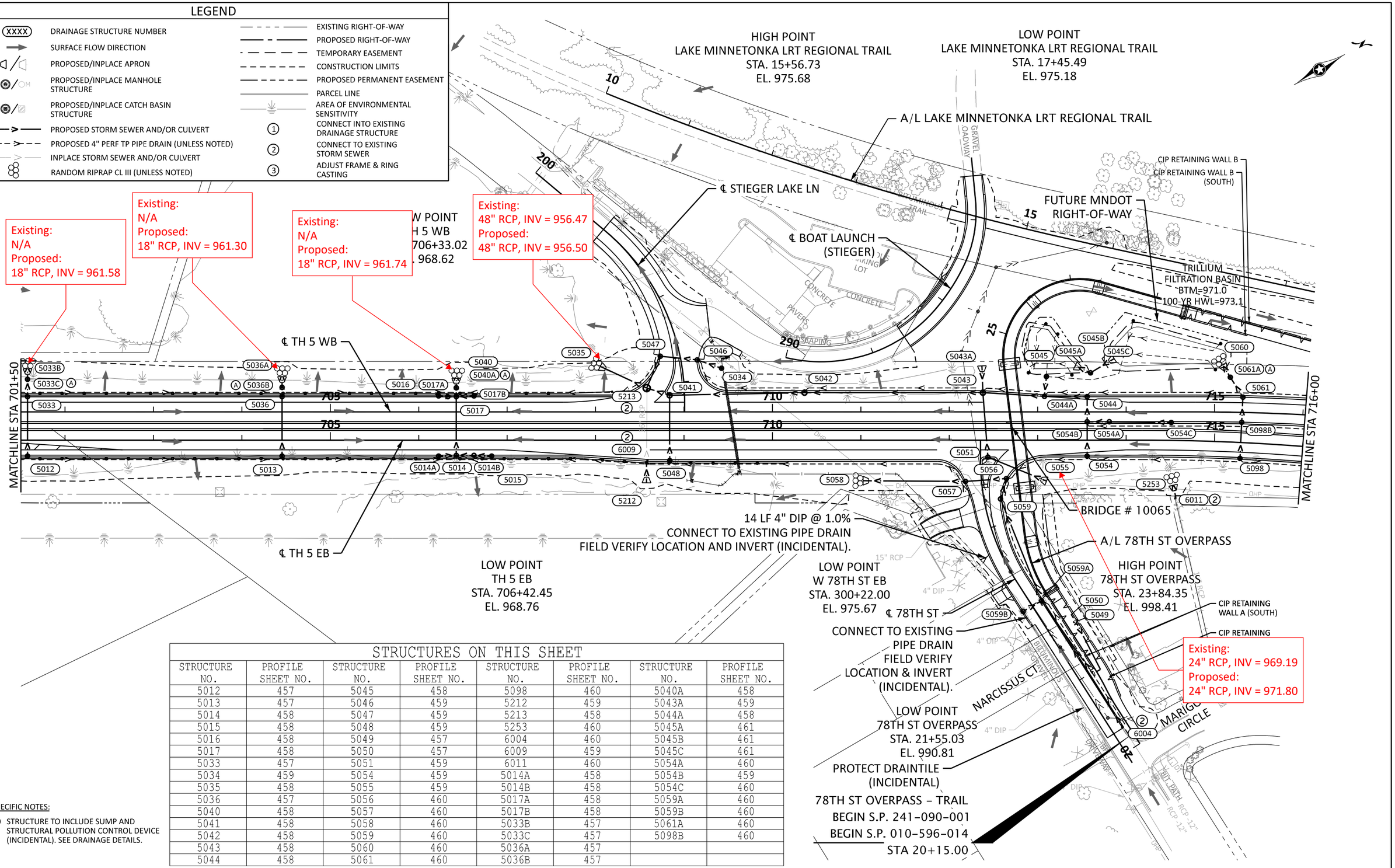

SPECIFIC NOTES:

(A) STRUCTURE TO INCLUDE SUMP AND STRUCTURAL POLLUTION CONTROL DEVICE (INCIDENTAL). SEE DRAINAGE DETAILS.

STRUCTURES ON THIS SHEET

STRUCTURE NO.	PROFILE SHEET NO.	STRUCTURE NO.	PROFILE SHEET NO.	STRUCTURE NO.	PROFILE SHEET NO.	STRUCTURE NO.	PROFILE SHEET NO.
5012	457	5045	458	5098	460	5040A	458
5013	457	5046	459	5212	459	5043A	459
5014	458	5047	459	5213	458	5044A	458
5015	458	5048	459	5253	460	5045A	461
5016	458	5049	457	6004	460	5045B	461
5017	458	5050	457	6009	459	5045C	461
5033	457	5051	459	6011	460	5054A	460
5034	459	5054	459	5014A	458	5054B	459
5035	458	5055	459	5014B	458	5054C	460
5036	457	5056	460	5017A	458	5059A	460
5040	458	5057	460	5017B	458	5059B	460
5041	458	5058	460	5033B	457	5061A	460
5042	458	5059	460	5033C	457	5098B	460
5043	458	5060	460	5036A	457		
5044	458	5061	460	5036B	457		

0 50 100
SCALE FEET

BOLTON & MENK
12224 NICOLLET AVENUE
BURNSVILLE, MINNESOTA 55337
Phone: (952) 890-0509
Email: Burnsville@bolton-menk.com
www.bolton-menk.com

REV.	BY	DATE

I HEREBY CERTIFY THAT THIS PLAN, SPECIFICATION, OR REPORT WAS PREPARED BY ME OR UNDER MY DIRECT SUPERVISION AND THAT I AM A DULY LICENSED PROFESSIONAL ENGINEER UNDER THE LAWS OF THE STATE OF MINNESOTA.

JOHN L. PERKINS
LIC. NO. 56278 DATE 03/14/2025

DESIGNED GMG
DRAWN MMH
CHECKED JLP

S.P. 1002-124, S.P. 1008-113, S.P. 010-596-014, S.P. 010-596-016, S.P. 010-613-009, S.P. 241-020-003, S.P. 241-090-001

TH 5 RECONSTRUCTION

DRAINAGE PLANS

0T4M00197_pen.tbl
pdf-B and W.pltcfg 11:18:58 AM H:\CACO\0T4M00197\CAD\ORD\CACO-0T4M00197\plans\Drainage\cd1002124_300drp002.dgn
John.Perkins 7/3/2025
Default

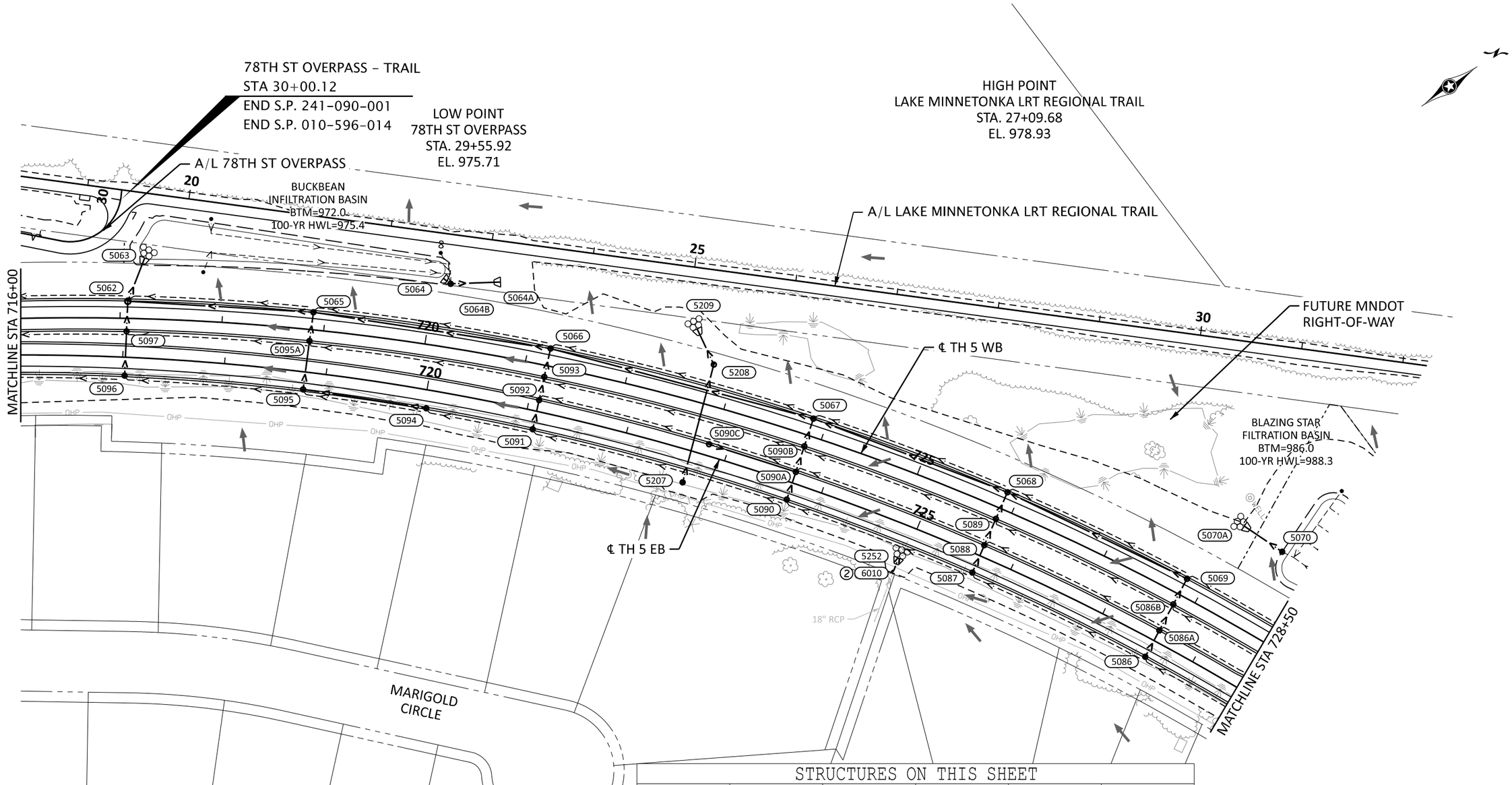

STRUCTURES ON THIS SHEET

STRUCTURE NO.	PROFILE SHEET NO.	STRUCTURE NO.	PROFILE SHEET NO.	STRUCTURE NO.	PROFILE SHEET NO.
5062	461	5089	463	5252	463
5063	461	5090	462	6010	463
5064	462	5091	462	5064A	462
5065	461	5092	462	5064B	462
5066	461	5093	462	5070A	462
5067	461	5094	462	5086A	463
5068	461	5095	462	5086B	463
5069	461	5096	462	5090A	462
5070	462	5097	462	5090B	462
5086	463	5207	463	5090C	463
5087	463	5208	463	5095A	462
5088	463	5209	463		

LEGEND

- (XXXX) DRAINAGE STRUCTURE NUMBER
- SURFACE FLOW DIRECTION
- PROPOSED/INPLACE APRON
- PROPOSED/INPLACE MANHOLE STRUCTURE
- PROPOSED/INPLACE CATCH BASIN STRUCTURE
- PROPOSED STORM SEWER AND/OR CULVERT
- PROPOSED 4" PERF TP PIPE DRAIN (UNLESS NOTED)
- INPLACE STORM SEWER AND/OR CULVERT
- RANDOM RIPRAP CL III (UNLESS NOTED)
- EXISTING RIGHT-OF-WAY
- PROPOSED RIGHT-OF-WAY
- TEMPORARY EASEMENT
- CONSTRUCTION LIMITS
- PROPOSED PERMANENT EASEMENT
- PARCEL LINE
- AREA OF ENVIRONMENTAL SENSITIVITY
- (1) CONNECT INTO EXISTING DRAINAGE STRUCTURE
- (2) CONNECT TO EXISTING STORM SEWER
- (3) ADJUST FRAME & RING CASTING

0 50 100
SCALE FEET

Default

BOLTON & MENK
12224 NICOLLET AVENUE
BURNSVILLE, MINNESOTA 55337
Phone: (952) 890-0509
Email: Burnsville@bolton-menk.com
www.bolton-menk.com

REV.	BY	DATE

I HEREBY CERTIFY THAT THIS PLAN, SPECIFICATION, OR REPORT WAS PREPARED BY ME OR UNDER MY DIRECT SUPERVISION AND THAT I AM A DULY LICENSED PROFESSIONAL ENGINEER UNDER THE LAWS OF THE STATE OF MINNESOTA.

JOHN L. PERKINS
LIC. NO. 56278 DATE 03/14/2025

DESIGNED GMG
DRAWN MMH
CHECKED JLP

S.P. 1002-124, S.P. 1008-113, S.P. 010-596-014, S.P. 010-596-016, S.P. 010-613-009, S.P. 241-020-003, S.P. 241-090-001

TH 5 RECONSTRUCTION

DRAINAGE PLANS

SHEET 432 OF 729

0T4M00197_pen.tbl
H:\CACO\0T4M00197\CAD\ORD\CACO-0T4M00197\plans\Drainage\cd1002124_300drp003.dgn
pdf-B and W.pltcfg
11:18:59 AM
John.Perkins
7/3/2025

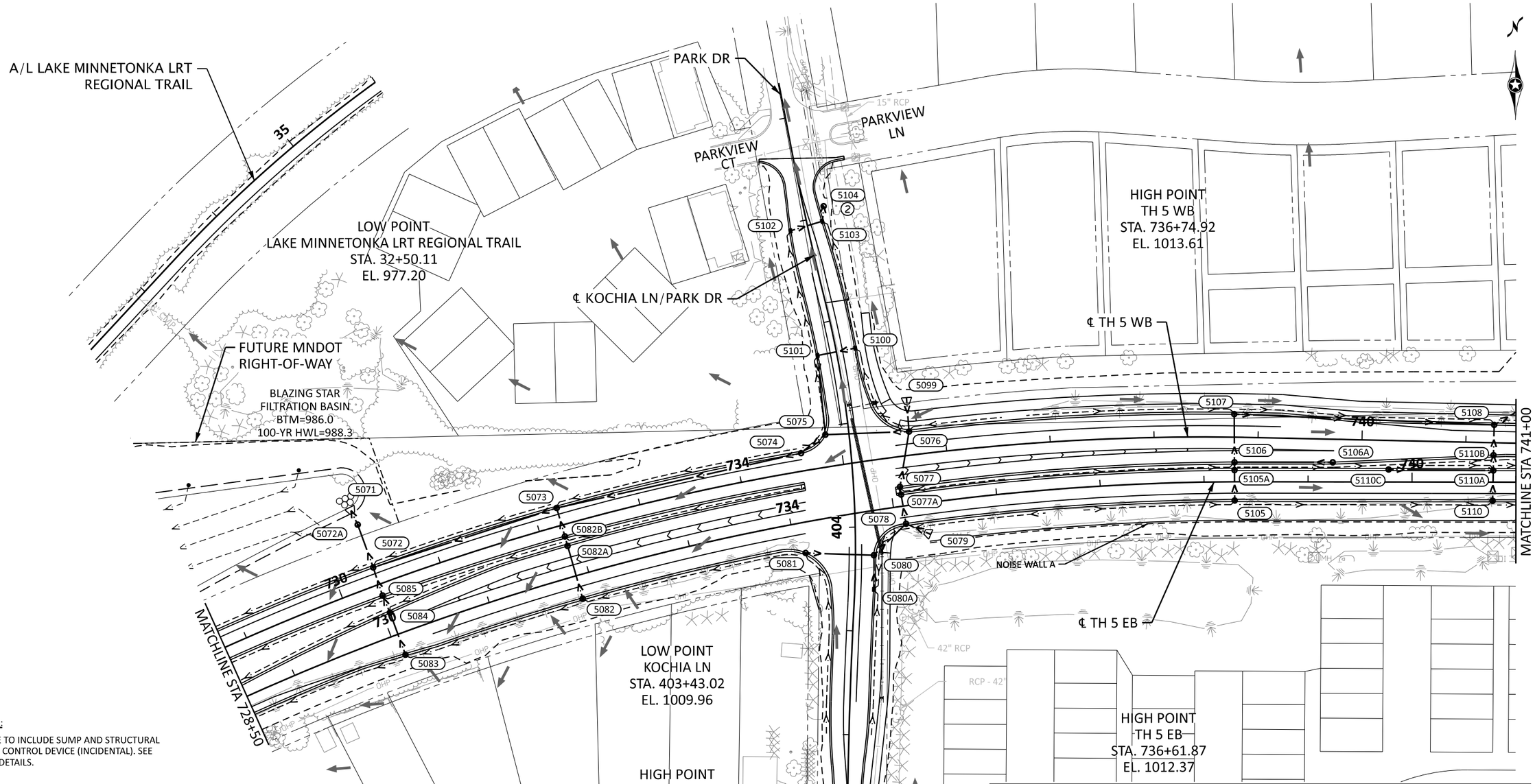

SPECIFIC NOTES:

(A) STRUCTURE TO INCLUDE SUMP AND STRUCTURAL POLLUTION CONTROL DEVICE (INCIDENTAL). SEE DRAINAGE DETAILS.

LEGEND

XXXX	DRAINAGE STRUCTURE NUMBER
	SURFACE FLOW DIRECTION
	PROPOSED/INPLACE APRON
	PROPOSED/INPLACE MANHOLE STRUCTURE
	PROPOSED/INPLACE CATCH BASIN STRUCTURE
	PROPOSED STORM SEWER AND/OR CULVERT
	PROPOSED 4" PERF TP PIPE DRAIN (UNLESS NOTED)
	INPLACE STORM SEWER AND/OR CULVERT
	RANDOM RIPRAP CL III (UNLESS NOTED)
	EXISTING RIGHT-OF-WAY
	PROPOSED RIGHT-OF-WAY
	TEMPORARY EASEMENT
	CONSTRUCTION LIMITS
	PROPOSED PERMANENT EASEMENT
	PARCEL LINE
	AREA OF ENVIRONMENTAL SENSITIVITY
1	CONNECT INTO EXISTING DRAINAGE STRUCTURE
2	CONNECT TO EXISTING STORM SEWER
3	ADJUST FRAME & RING CASTING

STRUCTURES ON THIS SHEET

STRUCTURE NO.	PROFILE SHEET NO.	STRUCTURE NO.	PROFILE SHEET NO.	STRUCTURE NO.	PROFILE SHEET NO.
5071	464	5083	464	5108	466
5072	464	5084	464	5110	466
5073	464	5085	464	5072A	464
5074	464	5099	465	5077A	464
5075	464	5100	465	5080A	465
5076	464	5101	465	5082A	464
5077	464	5102	465	5082B	464
5078	464	5103	465	5105A	466
5079	465	5104	465	5106A	466
5080	465	5105	466	5110A	466
5081	465	5106	466	5110B	466
5082	464	5107	466	5110C	466

0 50 100
SCALE FEET

Default

BOLTON & MENK
12224 NICOLLET AVENUE
BURNSVILLE, MINNESOTA 55337
Phone: (952) 890-0509
Email: Burnsville@bolton-menk.com
www.bolton-menk.com

REV.	BY	DATE

I HEREBY CERTIFY THAT THIS PLAN, SPECIFICATION, OR REPORT WAS PREPARED BY ME OR UNDER MY DIRECT SUPERVISION AND THAT I AM A DULY LICENSED PROFESSIONAL ENGINEER UNDER THE LAWS OF THE STATE OF MINNESOTA.

JOHN L. PERKINS
LIC. NO. 56278 DATE 03/14/2025

DESIGNED GMG
DRAWN MMH
CHECKED JLP

S.P. 1002-124, S.P. 1008-113, S.P. 010-596-014,
S.P. 010-596-016, S.P. 010-613-009, S.P. 241-020-003, S.P. 241-090-001

TH 5 RECONSTRUCTION

DRAINAGE PLANS

0T4M00197_pen.tbl
H:\CACO\0T4M00197\CAD\ORD\CACO-0T4M00197\plans\Drainage\cd1002124_300drp004.dgn
pdf-B and W.pltcfg
11:19:00 AM
John.Perkins
7/3/2025

LEGEND

XXXX	DRAINAGE STRUCTURE NUMBER
	SURFACE FLOW DIRECTION
	PROPOSED/INPLACE APRON
	PROPOSED/INPLACE MANHOLE STRUCTURE
	PROPOSED/INPLACE CATCH BASIN STRUCTURE
	PROPOSED STORM SEWER AND/OR CULVERT
	PROPOSED 4" PERF TP PIPE DRAIN (UNLESS NOTED)
	INPLACE STORM SEWER AND/OR CULVERT
	RANDOM RIPRAP CL III (UNLESS NOTED)
	EXISTING RIGHT-OF-WAY
	PROPOSED RIGHT-OF-WAY
	TEMPORARY EASEMENT
	CONSTRUCTION LIMITS
	PROPOSED PERMANENT EASEMENT
	PARCEL LINE
	AREA OF ENVIRONMENTAL SENSITIVITY
1	CONNECT INTO EXISTING DRAINAGE STRUCTURE
2	CONNECT TO EXISTING STORM SEWER
3	ADJUST FRAME & RING CASTING

SPECIFIC NOTES:

A. STRUCTURE TO INCLUDE SUMP AND STRUCTURAL POLLUTION CONTROL DEVICE (INCIDENTAL). SEE DRAINAGE DETAILS.

B. SEE CIP RETAINING WALL PLAN & DETAILS FOR MORE INFORMATION.

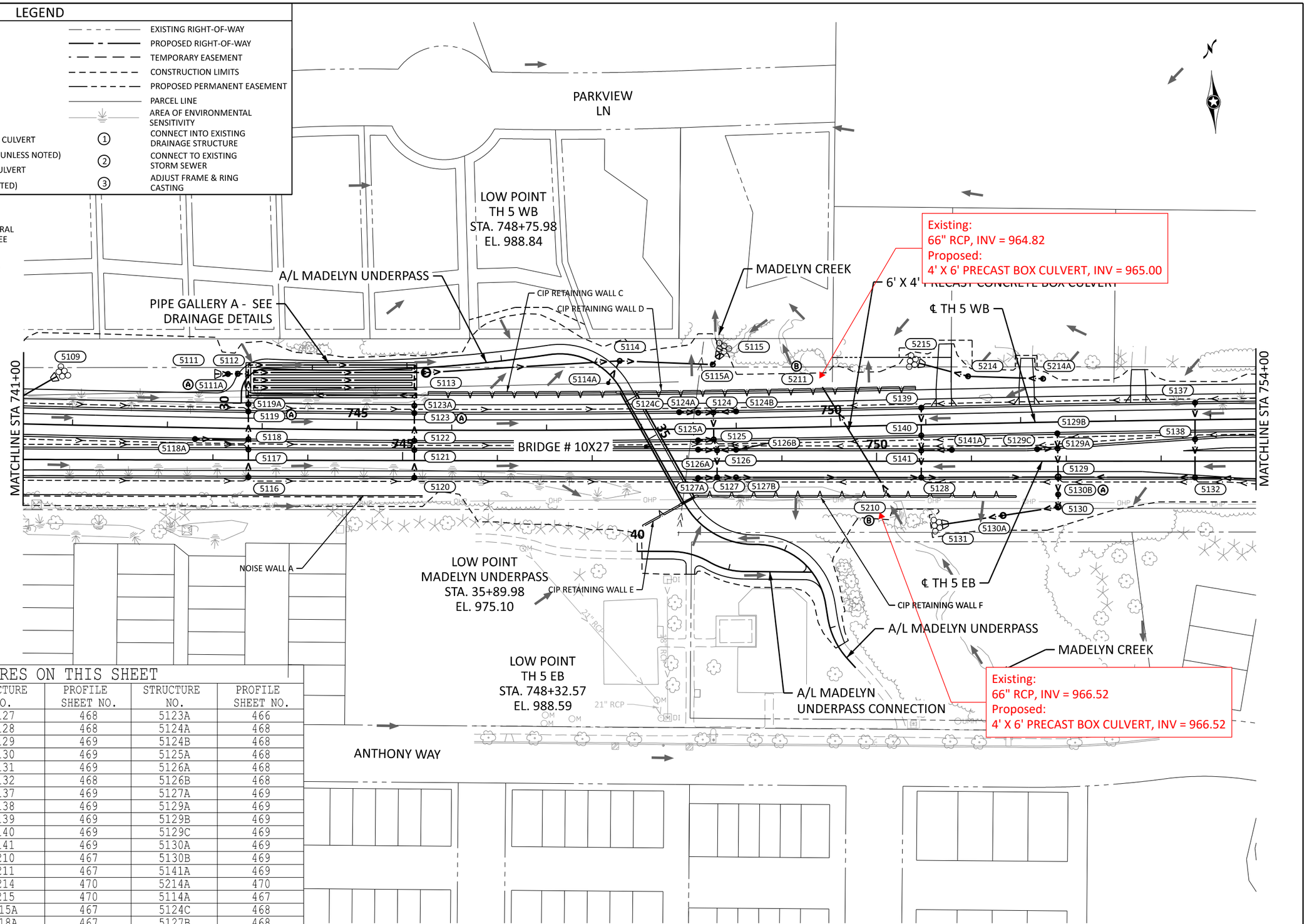

STRUCTURES ON THIS SHEET

STRUCTURE NO.	PROFILE SHEET NO.	STRUCTURE NO.	PROFILE SHEET NO.	STRUCTURE NO.	PROFILE SHEET NO.
5109	466	5127	468	5123A	466
5111	466	5128	468	5124A	468
5111A	466	5129	469	5124B	468
5112	466	5130	469	5125A	468
5113	467	5131	469	5126A	468
5114	467	5132	468	5126B	468
5115	467	5137	469	5127A	469
5116	466	5138	469	5129A	469
5117	466	5139	469	5129B	469
5118	466	5140	469	5129C	469
5119	466	5141	469	5130A	469
5120	467	5210	467	5130B	469
5121	467	5211	467	5141A	469
5122	467	5214	470	5214A	470
5123	467	5215	470	5114A	467
5124	468	5115A	467	5124C	468
5125	468	5118A	467	5127B	468
5126	468	5119A	466	5111A	466

0 50 100
SCALE FEET

Default

BOLTON & MENK
12224 NICOLLET AVENUE
BURNSVILLE, MINNESOTA 55337
Phone: (952) 890-0509
Email: Burnsville@bolton-menk.com
www.bolton-menk.com

REV.	BY	DATE

I HEREBY CERTIFY THAT THIS PLAN, SPECIFICATION, OR REPORT WAS PREPARED BY ME OR UNDER MY DIRECT SUPERVISION AND THAT I AM A DULY LICENSED PROFESSIONAL ENGINEER UNDER THE LAWS OF THE STATE OF MINNESOTA.

JOHN L. PERKINS
LIC. NO. 56278 DATE 03/14/2025

DESIGNED GMG
DRAWN MMH
CHECKED JLP

S.P. 1002-124, S.P. 1008-113, S.P. 010-596-014, S.P. 010-596-016, S.P. 010-613-009, S.P. 241-020-003, S.P. 241-090-001

TH 5 RECONSTRUCTION

DRAINAGE PLANS

SHEET 434 OF 729

0T4M00197_pen.tbl
H:\CACO\0T4M00197\CAD\ORD\CACO-0T4M00197\plans\Drainage\cd1002124_300drp005.dgn
pdf-B and W.pltcfg
11:19:01 AM
John.Perkins
7/3/2025

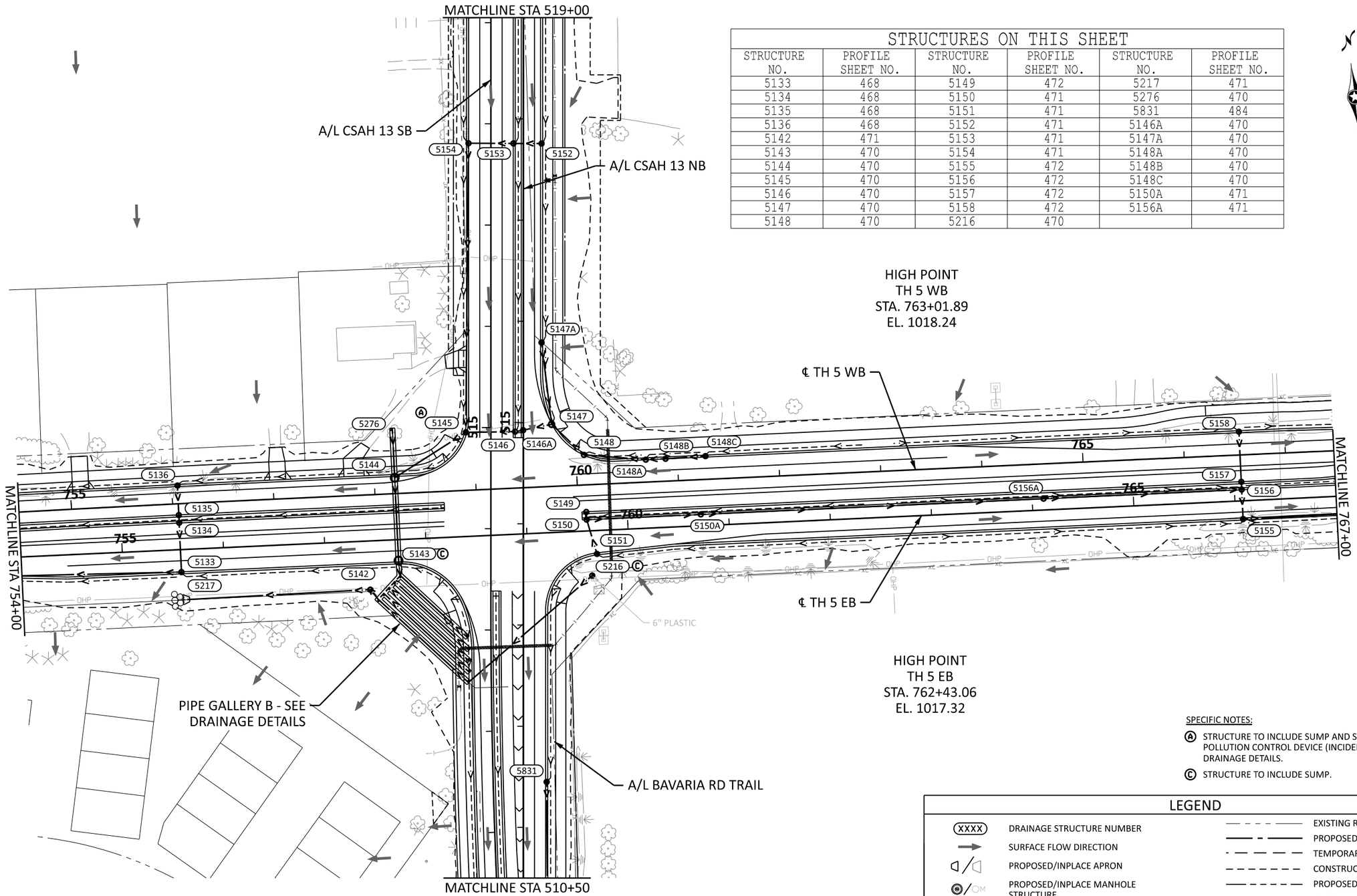

STRUCTURES ON THIS SHEET					
STRUCTURE NO.	PROFILE SHEET NO.	STRUCTURE NO.	PROFILE SHEET NO.	STRUCTURE NO.	PROFILE SHEET NO.
5133	468	5149	472	5217	471
5134	468	5150	471	5276	470
5135	468	5151	471	5831	484
5136	468	5152	471	5146A	470
5142	471	5153	471	5147A	470
5143	470	5154	471	5148A	470
5144	470	5155	472	5148B	470
5145	470	5156	472	5148C	470
5146	470	5157	472	5150A	471
5147	470	5158	472	5156A	471
5148	470	5216	470		

SPECIFIC NOTES:

Ⓐ STRUCTURE TO INCLUDE SUMP AND STRUCTURAL POLLUTION CONTROL DEVICE (INCIDENTAL). SEE DRAINAGE DETAILS.

Ⓒ STRUCTURE TO INCLUDE SUMP.

LEGEND

XXXX	DRAINAGE STRUCTURE NUMBER		EXISTING RIGHT-OF-WAY
	SURFACE FLOW DIRECTION		PROPOSED RIGHT-OF-WAY
	PROPOSED/INPLACE APRON		TEMPORARY EASEMENT
	PROPOSED/INPLACE MANHOLE STRUCTURE		CONSTRUCTION LIMITS
	PROPOSED/INPLACE CATCH BASIN STRUCTURE		PROPOSED PERMANENT EASEMENT
	PROPOSED STORM SEWER AND/OR CULVERT		PARCEL LINE
	PROPOSED 4" PERF TP PIPE DRAIN (UNLESS NOTED)		AREA OF ENVIRONMENTAL SENSITIVITY
	INPLACE STORM SEWER AND/OR CULVERT	1	CONNECT INTO EXISTING DRAINAGE STRUCTURE
	RANDOM RIPRAP CL III (UNLESS NOTED)	2	CONNECT TO EXISTING STORM SEWER
		3	ADJUST FRAME & RING CASTING

0 50 100
SCALE FEET

BOLTON & MENK
12224 NICOLLET AVENUE
BURNSVILLE, MINNESOTA 55337
Phone: (952) 890-0509
Email: Burnsville@bolton-menk.com
www.bolton-menk.com

REV.	BY	DATE

I HEREBY CERTIFY THAT THIS PLAN, SPECIFICATION, OR REPORT WAS PREPARED BY ME OR UNDER MY DIRECT SUPERVISION AND THAT I AM A DULY LICENSED PROFESSIONAL ENGINEER UNDER THE LAWS OF THE STATE OF MINNESOTA.

JOHN L. PERKINS
LIC. NO. 56278 DATE 03/14/2025

DESIGNED GMG
DRAWN MMH
CHECKED JLP

S.P. 1002-124, S.P. 1008-113, S.P. 010-596-014, S.P. 010-596-016, S.P. 010-613-009, S.P. 241-020-003, S.P. 241-090-001

TH 5 RECONSTRUCTION

DRAINAGE PLANS

0T4M00197_pen.tbl
pdf-B and W.pltcfg
11:19:02 AM
H:\CACO\0T4M00197\CAD\ORD\CACO-0T4M00197\plans\Drainage\cd1002124_300drp006.dgn
John.Perkins
7/3/2025
Default

LEGEND

XXXX	DRAINAGE STRUCTURE NUMBER
	SURFACE FLOW DIRECTION
	PROPOSED/INPLACE APRON
OM	PROPOSED/INPLACE MANHOLE STRUCTURE
	PROPOSED/INPLACE CATCH BASIN STRUCTURE
	PROPOSED STORM SEWER AND/OR CULVERT
	PROPOSED 4" PERF TP PIPE DRAIN (UNLESS NOTED)
	INPLACE STORM SEWER AND/OR CULVERT
	RANDOM RIPRAP CL III (UNLESS NOTED)
	EXISTING RIGHT-OF-WAY
	PROPOSED RIGHT-OF-WAY
	TEMPORARY EASEMENT
	CONSTRUCTION LIMITS
	PROPOSED PERMANENT EASEMENT
	PARCEL LINE
	AREA OF ENVIRONMENTAL SENSITIVITY
1	CONNECT INTO EXISTING DRAINAGE STRUCTURE
2	CONNECT TO EXISTING STORM SEWER
3	ADJUST FRAME & RING CASTING

STRUCTURES ON THIS SHEET

STRUCTURE NO.	PROFILE SHEET NO.	STRUCTURE NO.	PROFILE SHEET NO.	STRUCTURE NO.	PROFILE SHEET NO.
5159	473	5220	476	5184B	475
5160	473	5221	476	5184C	475
5161	473	5178A	473	5184D	475
5162	475	5178B	473	5184E	475
5163	475	5178C	473	5186A	475
5178	472	5178D	473	5186B	475
5179	472	5181A	473	5186C	475
5180	473	5181B	473	5186D	475
5181	473	5182A	473	5186E	475
5182	472	5182B	473	5186F	475
5183	474	5182C	473	5189A	476
5184	475	5182D	474	5189B	476
5185	475	5182E	474	5219A	476
5186	474	5182F	474		
5219	476	5184A	475		

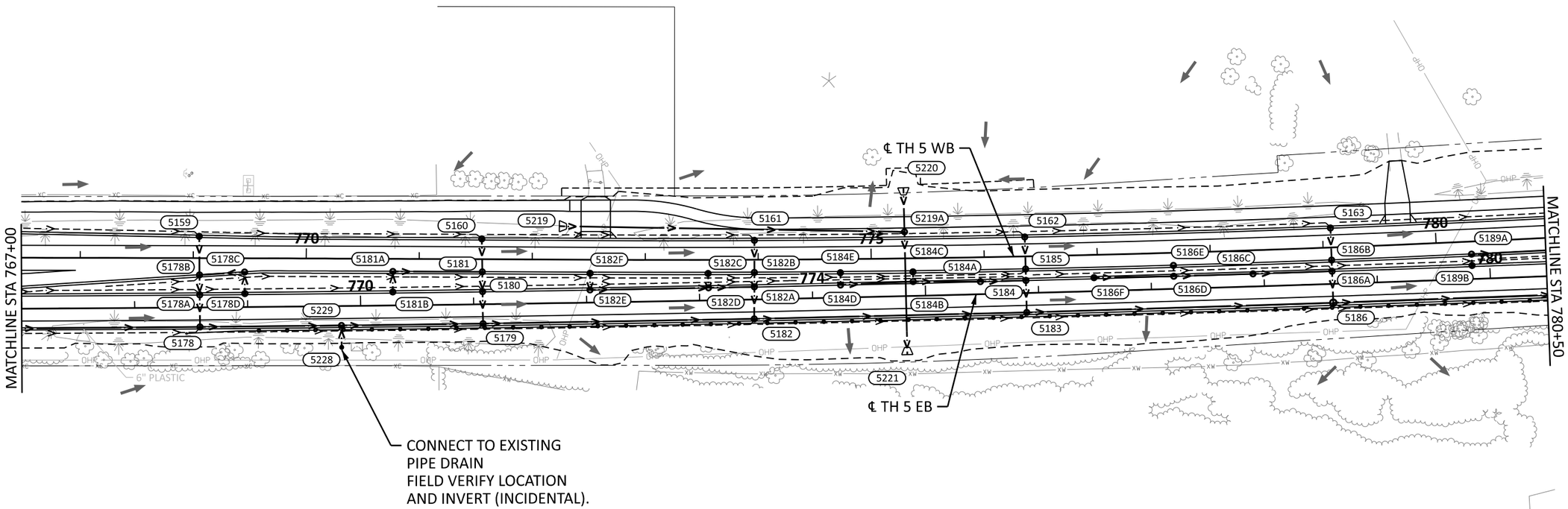

0T4M00197_pen.tbl
pdf-B and W.pltcfg
11:19:02 AM
H:\CACO\0T4M00197\CAD\ORD\CACO-0T4M00197\plans\Drainage\cd1002124_300drp007.dgn
John.Perkins
7/3/2025
Default

0 50 100
SCALE FEET

BOLTON & MENK

12224 NICOLLET AVENUE
BURNSVILLE, MINNESOTA 55337
Phone: (952) 890-0509
Email: Burnsville@bolton-menk.com
www.bolton-menk.com

REV.	BY	DATE

I HEREBY CERTIFY THAT THIS PLAN, SPECIFICATION, OR REPORT WAS PREPARED BY ME OR UNDER MY DIRECT SUPERVISION AND THAT I AM A DULY LICENSED PROFESSIONAL ENGINEER UNDER THE LAWS OF THE STATE OF MINNESOTA.

JOHN L. PERKINS
LIC. NO. 56278 DATE 03/14/2025

DESIGNED GMG
DRAWN MMH
CHECKED JLP

S.P. 1002-124, S.P. 1008-113, S.P. 010-596-014,
S.P. 010-596-016, S.P. 010-613-009, S.P. 241-020-003, S.P. 241-090-001

TH 5 RECONSTRUCTION

DRAINAGE PLANS

LEGEND

XXXX	DRAINAGE STRUCTURE NUMBER
	SURFACE FLOW DIRECTION
	PROPOSED/INPLACE APRON
	PROPOSED/INPLACE MANHOLE STRUCTURE
	PROPOSED/INPLACE CATCH BASIN STRUCTURE
	PROPOSED STORM SEWER AND/OR CULVERT
	PROPOSED 4" PERF TP PIPE DRAIN (UNLESS NOTED)
	INPLACE STORM SEWER AND/OR CULVERT
	RANDOM RIPRAP CL III (UNLESS NOTED)
	EXISTING RIGHT-OF-WAY
	PROPOSED RIGHT-OF-WAY
	TEMPORARY EASEMENT
	CONSTRUCTION LIMITS
	PROPOSED PERMANENT EASEMENT
	PARCEL LINE
	AREA OF ENVIRONMENTAL SENSITIVITY
1	CONNECT INTO EXISTING DRAINAGE STRUCTURE
2	CONNECT TO EXISTING STORM SEWER
3	ADJUST FRAME & RING CASTING

SPECIFIC NOTES:

(A) STRUCTURE TO INCLUDE SUMP AND STRUCTURAL POLLUTION CONTROL DEVICE (INCIDENTAL). SEE DRAINAGE DETAILS.

STRUCTURES ON THIS SHEET

STRUCTURE NO.	PROFILE SHEET NO.	STRUCTURE NO.	PROFILE SHEET NO.	STRUCTURE NO.	PROFILE SHEET NO.
5164	476	5194	477	5234	478
5165	474	5195	477	5235	478
5166	477	5196	477	5166A	477
5167	474	5197	478	5167A	474
5168	474	5198	477	5169A	477
5169	474	5199	477	5169B	477
5170	477	5200	476	5169C	477
5171	477	5201	477	5171A	478
5172	477	5218	478	5188A	476
5173	477	5222	478	5191A	476
5174	477	5223	478	5195A	477
5187	474	5224	478	5195B	478
5188	476	5225	478	5196A	478
5189	476	5226	474	5196B	478
5190	474	5227	474	5197A	478
	474	5230	478	5197B	478
	477	5231	478	5222A	478
	477	5232	478	5226A	474

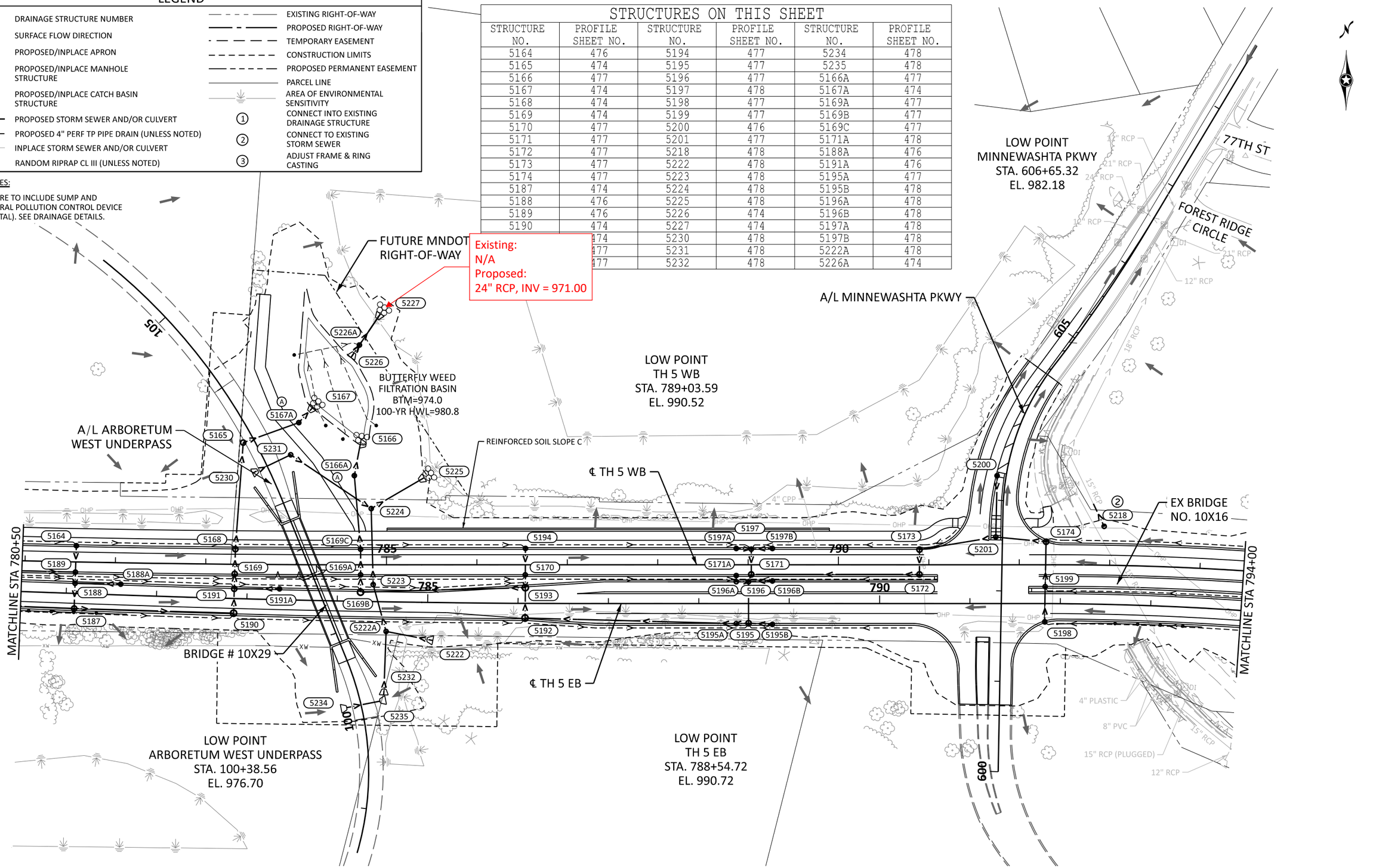

0 50 100
SCALE FEET

BOLTON & MENK
12224 NICOLLET AVENUE
BURNSVILLE, MINNESOTA 55337
Phone: (952) 890-0509
Email: Burnsville@bolton-menk.com
www.bolton-menk.com

REV.	BY	DATE

I HEREBY CERTIFY THAT THIS PLAN, SPECIFICATION, OR REPORT WAS PREPARED BY ME OR UNDER MY DIRECT SUPERVISION AND THAT I AM A DULY LICENSED PROFESSIONAL ENGINEER UNDER THE LAWS OF THE STATE OF MINNESOTA.

JOHN L. PERKINS
LIC. NO. 56278 DATE 03/14/2025

DESIGNED GMG
DRAWN MMH
CHECKED JLP

S.P. 1002-124, S.P. 1008-113, S.P. 010-596-014, S.P. 010-596-016, S.P. 010-613-009, S.P. 241-020-003, S.P. 241-090-001

TH 5 RECONSTRUCTION

DRAINAGE PLANS

0T4M00197_pen.tbl
H:\CACO\0T4M00197\CAD\ORD\CACO-0T4M00197\plans\Drainage\cd1002124_300drp008.dgn
pdf-B and W.pltcfg
11:19:03 AM
John.Perkins
7/3/2025
Default

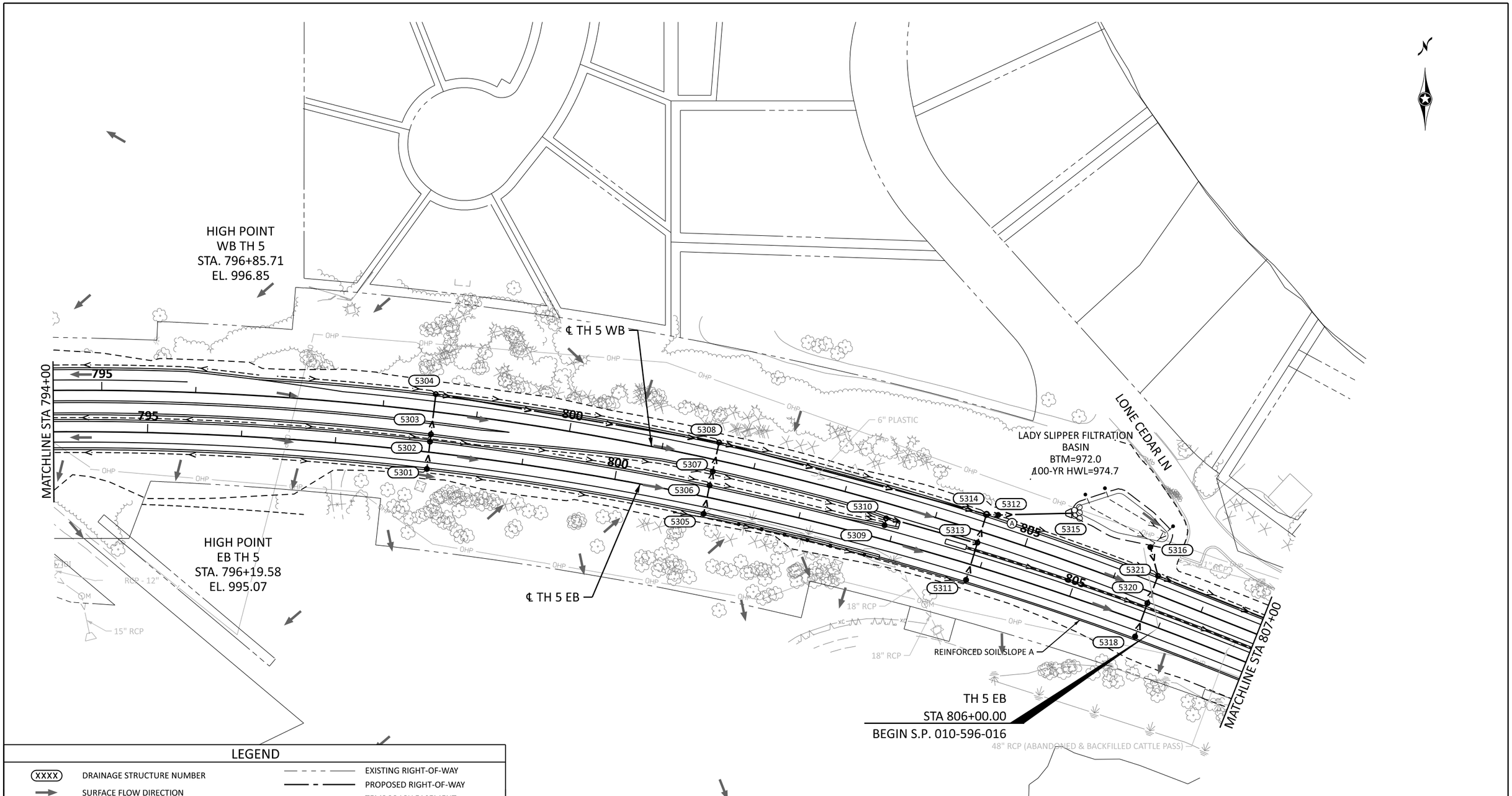

LEGEND

XXXX	DRAINAGE STRUCTURE NUMBER		EXISTING RIGHT-OF-WAY
	SURFACE FLOW DIRECTION		PROPOSED RIGHT-OF-WAY
	PROPOSED/INPLACE APRON		TEMPORARY EASEMENT
	PROPOSED/INPLACE MANHOLE STRUCTURE		CONSTRUCTION LIMITS
			PROPOSED PERMANENT EASEMENT
			PARCEL LINE
	PROPOSED/INPLACE CATCH BASIN STRUCTURE		AREA OF ENVIRONMENTAL SENSITIVITY
	PROPOSED STORM SEWER AND/OR CULVERT	1	CONNECT INTO EXISTING DRAINAGE STRUCTURE
	PROPOSED 4" PERF TP PIPE DRAIN (UNLESS NOTED)	2	CONNECT TO EXISTING STORM SEWER
	INPLACE STORM SEWER AND/OR CULVERT	3	ADJUST FRAME & RING CASTING
	RANDOM RIPRAP CL III (UNLESS NOTED)		

SPECIFIC NOTES:

(A) STRUCTURE TO INCLUDE SUMP AND STRUCTURAL POLLUTION CONTROL DEVICE (INCIDENTAL). SEE DRAINAGE DETAILS.

STRUCTURES ON THIS SHEET

STRUCTURE NO.	PROFILE SHEET NO.	STRUCTURE NO.	PROFILE SHEET NO.	STRUCTURE NO.	PROFILE SHEET NO.
5301	488	5308	488	5315	488
5302	488	5309	488	5316	489
5303	488	5310	488	5318	489
5304	488	5311	488	5320	489
5305	488	5312	488	5321	489
5306	488	5313	488		
5307	488	5314	488		

0 50 100
SCALE FEET

Default

BOLTON & MENK
12224 NICOLLET AVENUE
BURNSVILLE, MINNESOTA 55337
Phone: (952) 890-0509
Email: Burnsville@bolton-menk.com
www.bolton-menk.com

REV.	BY	DATE

I HEREBY CERTIFY THAT THIS PLAN, SPECIFICATION, OR REPORT WAS PREPARED BY ME OR UNDER MY DIRECT SUPERVISION AND THAT I AM A DULY LICENSED PROFESSIONAL ENGINEER UNDER THE LAWS OF THE STATE OF MINNESOTA.

JOHN L. PERKINS
LIC. NO. 56278 DATE 03/14/2025

DESIGNED GMG
DRAWN MMH
CHECKED JLP

S.P. 1002-124, S.P. 1008-113, S.P. 010-596-014, S.P. 010-596-016, S.P. 010-613-009, S.P. 241-020-003, S.P. 241-090-001

TH 5 RECONSTRUCTION

DRAINAGE PLANS

0T4M00197_pen.tbl
H:\CACO\0T4M00197\CAD\ORD\CACO-0T4M00197\plans\Drainage\cd1002124_300drp009.dgn
pdf-B and W.pltcfg
11:19:04 AM
John.Perkins
7/3/2025

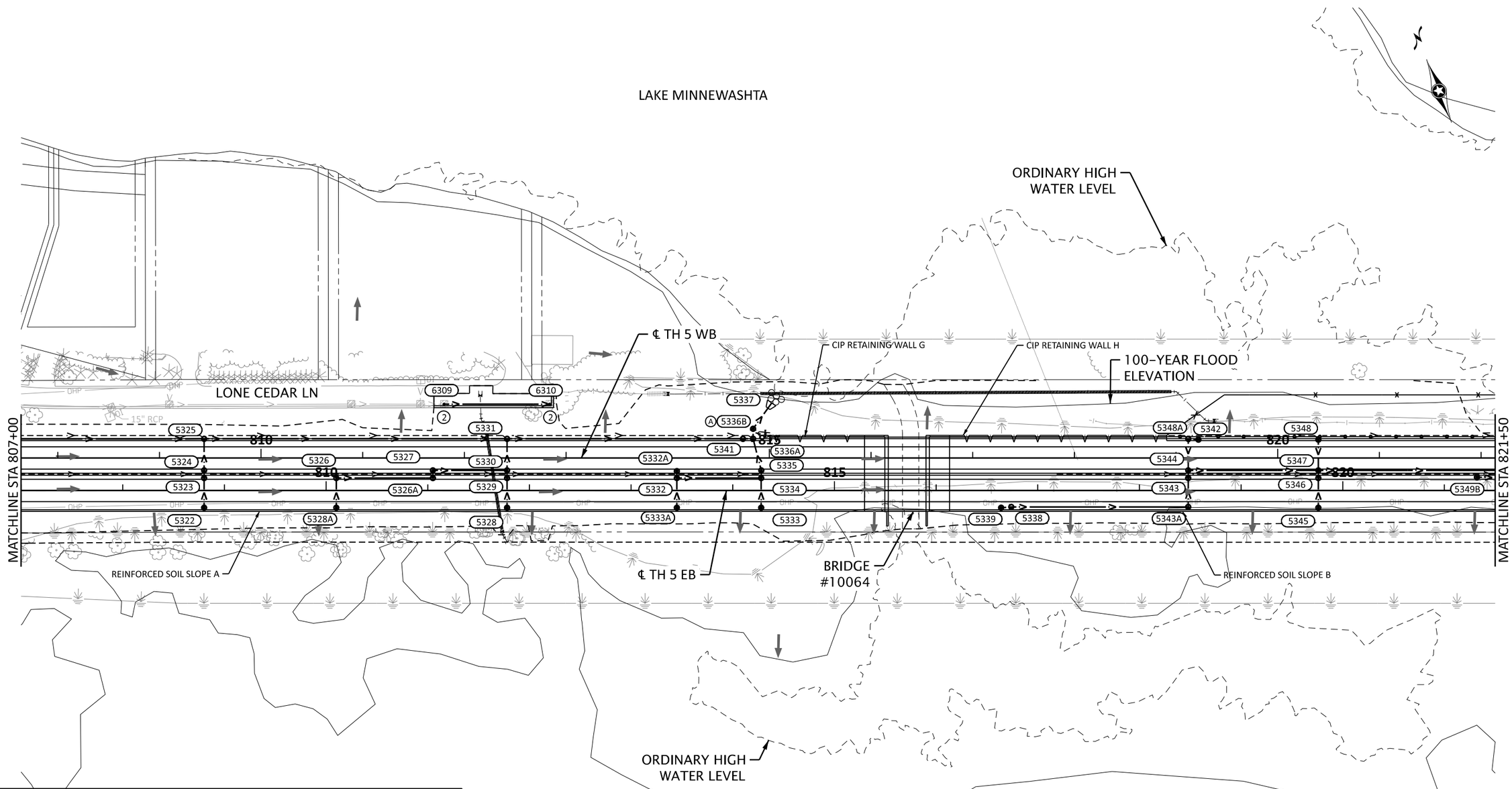

LEGEND

XXXX	DRAINAGE STRUCTURE NUMBER
	SURFACE FLOW DIRECTION
	PROPOSED/INPLACE APRON
	PROPOSED/INPLACE MANHOLE STRUCTURE
	PROPOSED/INPLACE CATCH BASIN STRUCTURE
	PROPOSED STORM SEWER AND/OR CULVERT
	PROPOSED 4" PERF TP PIPE DRAIN (UNLESS NOTED)
	INPLACE STORM SEWER AND/OR CULVERT
	RANDOM RIPRAP CL III (UNLESS NOTED)
	EXISTING RIGHT-OF-WAY
	PROPOSED RIGHT-OF-WAY
	TEMPORARY EASEMENT
	CONSTRUCTION LIMITS
	PROPOSED PERMANENT EASEMENT
	PARCEL LINE
	AREA OF ENVIRONMENTAL SENSITIVITY
1	CONNECT INTO EXISTING DRAINAGE STRUCTURE
2	CONNECT TO EXISTING STORM SEWER
3	ADJUST FRAME & RING CASTING

SPECIFIC NOTES:

(A) STRUCTURE TO INCLUDE A SUMP AND STRUCTURAL POLLUTION CONTROL DEVICE (INCIDENTAL). SEE DRAINAGE DETAILS.

STRUCTURES ON THIS SHEET

STRUCTURE NO.	PROFILE SHEET NO.	STRUCTURE NO.	PROFILE SHEET NO.	STRUCTURE NO.	PROFILE SHEET NO.	STRUCTURE NO.	PROFILE SHEET NO.
5322	489	5331	489	5342	491	5332A	490
5323	489	5332	490	5343	491	5333A	490
5324	489	5333	490	5344	491	5336A	489
5325	489	5334	490	5345	492	5336B	489
5326	490	5335	490	5346	492	5343A	491
5327	490	5337	489	5347	491	5348A	492
5328	490	5338	491	5348	492	5349B	492
5329	490	5339	491	5326A	490	6309	490
5330	490	5341	491	5328A	490	6310	490

0 50 100
SCALE FEET

BOLTON & MENK
12224 NICOLLET AVENUE
BURNSVILLE, MINNESOTA 55337
Phone: (952) 890-0509
Email: Burnsville@bolton-menk.com
www.bolton-menk.com

REV.	BY	DATE

I HEREBY CERTIFY THAT THIS PLAN, SPECIFICATION, OR REPORT WAS PREPARED BY ME OR UNDER MY DIRECT SUPERVISION AND THAT I AM A DULY LICENSED PROFESSIONAL ENGINEER UNDER THE LAWS OF THE STATE OF MINNESOTA.

JOHN L. PERKINS
LIC. NO. 56278 DATE 03/14/2025

DESIGNED GMG
DRAWN MMH
CHECKED JLP

S.P. 1002-124, S.P. 1008-113, S.P. 010-596-014, S.P. 010-596-016, S.P. 010-613-009, S.P. 241-020-003, S.P. 241-090-001

TH 5 RECONSTRUCTION

DRAINAGE PLANS

0T4M00197_pen.tbl
H:\CACO\0T4M00197\CAD\ORD\CACO-0T4M00197\plans\Drainage\cd1002124_300drp010.dgn
pdf-B and W.pltcfg
11:19:08 AM
John.Perkins
7/3/2025
Default

STRUCTURES ON THIS SHEET

STRUCTURE NO.	PROFILE SHEET NO.	STRUCTURE NO.	PROFILE SHEET NO.	STRUCTURE NO.	PROFILE SHEET NO.	STRUCTURE NO.	PROFILE SHEET NO.
5354A	492	5363	491	5381	494	5349A	492
5349	492	5364	494	5383	493	5356A	492
5350	491	5365	494	5384	493	5359A	493
5351	492	5366	494	5385	493	5359B	493
5352	492	5367	493	5387	493	5359C	493
5353	491	5368	494	5388	495	5360A	493
5354	491	5369	494	5389	495	5361A	493
5355	492	5370	491	5390	495	5362A	493
5356	492	5371	493	5391	495	5362B	493
5357	492	5372	494	5392	495	5394A	494
5358	491	5373	494	5394	494	5395A	495
5359	493	5374	494	5395	494	5395B	495
5360	493	5376	493	5396	494	5600	510
5361	493	5379	494	5398	494	5601	510
5362	491	5380	494	5573	495		

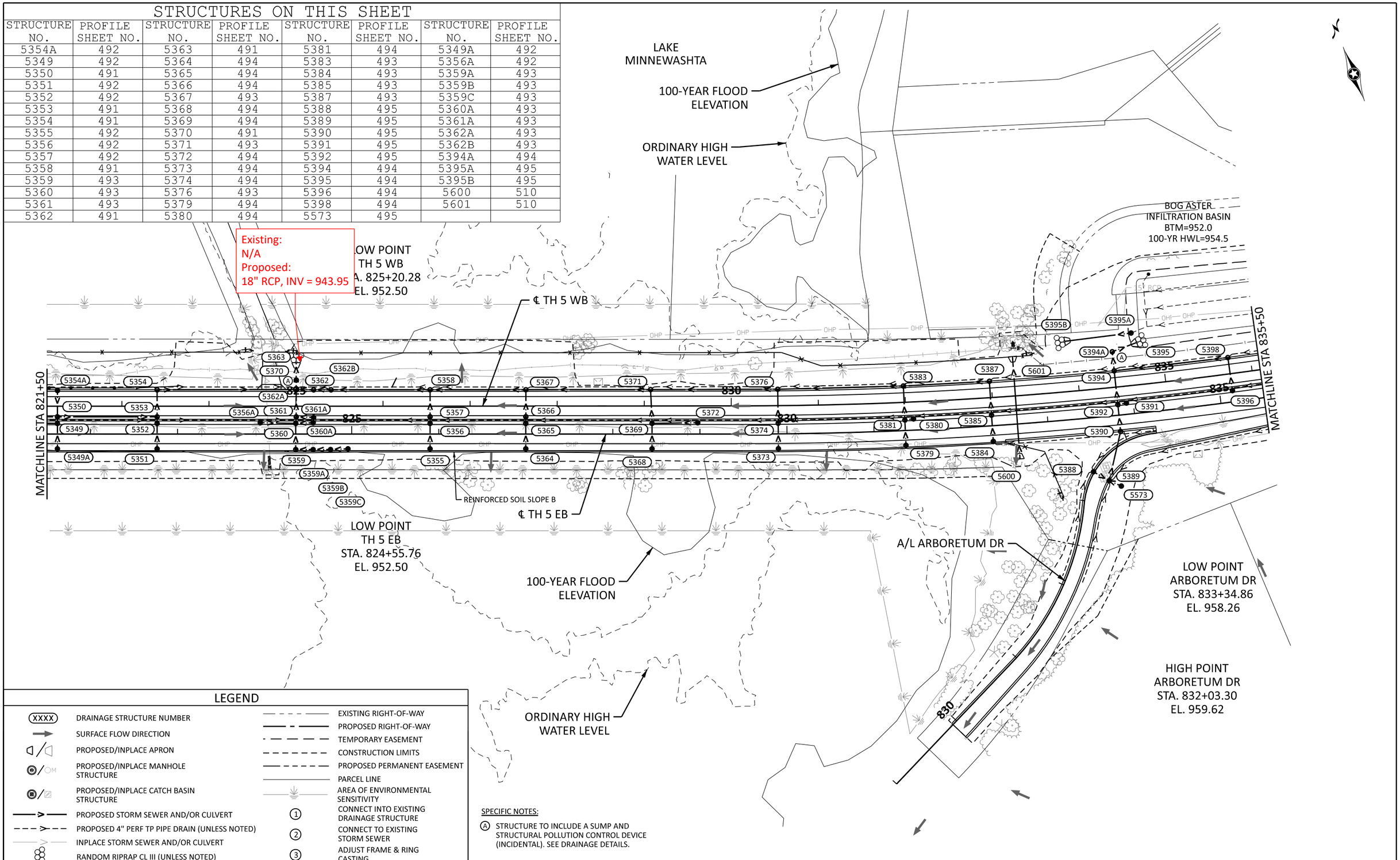

LEGEND

XXXX	DRAINAGE STRUCTURE NUMBER
	SURFACE FLOW DIRECTION
	PROPOSED/INPLACE APRON
	PROPOSED/INPLACE MANHOLE STRUCTURE
	PROPOSED/INPLACE CATCH BASIN STRUCTURE
	PROPOSED STORM SEWER AND/OR CULVERT
	PROPOSED 4" PERF TP PIPE DRAIN (UNLESS NOTED)
	INPLACE STORM SEWER AND/OR CULVERT
	RANDOM RIPRAP CL III (UNLESS NOTED)
	EXISTING RIGHT-OF-WAY
	PROPOSED RIGHT-OF-WAY
	TEMPORARY EASEMENT
	CONSTRUCTION LIMITS
	PROPOSED PERMANENT EASEMENT
	PARCEL LINE
	AREA OF ENVIRONMENTAL SENSITIVITY
1	CONNECT INTO EXISTING DRAINAGE STRUCTURE
2	CONNECT TO EXISTING STORM SEWER
3	ADJUST FRAME & RING CASTING

SPECIFIC NOTES:

(A) STRUCTURE TO INCLUDE A SUMP AND STRUCTURAL POLLUTION CONTROL DEVICE (INCIDENTAL). SEE DRAINAGE DETAILS.

0 50 100
SCALE FEET

Default

BOLTON & MENK
12224 NICOLLET AVENUE
BURNSVILLE, MINNESOTA 55337
Phone: (952) 890-0509
Email: Burnsville@bolton-menk.com
www.bolton-menk.com

REV.	BY	DATE

I HEREBY CERTIFY THAT THIS PLAN, SPECIFICATION, OR REPORT WAS PREPARED BY ME OR UNDER MY DIRECT SUPERVISION AND THAT I AM A DULY LICENSED PROFESSIONAL ENGINEER UNDER THE LAWS OF THE STATE OF MINNESOTA.

JOHN L. PERKINS
LIC. NO. 56278 DATE 03/14/2025

DESIGNED GMG
DRAWN MMH
CHECKED JLP

S.P. 1002-124, S.P. 1008-113, S.P. 010-596-014, S.P. 010-596-016, S.P. 010-613-009, S.P. 241-020-003, S.P. 241-090-001

TH 5 RECONSTRUCTION

DRAINAGE PLANS

SHEET 440 OF 729

0T4M00197_pen.tbl
H:\CACO\0T4M00197\CAD\ORD\CACO-0T4M00197\plans\Drainage\cd1002124_300drp011.dgn
pdf-B and W.pltcfg
11:19:09 AM
John.Perkins
7/3/2025

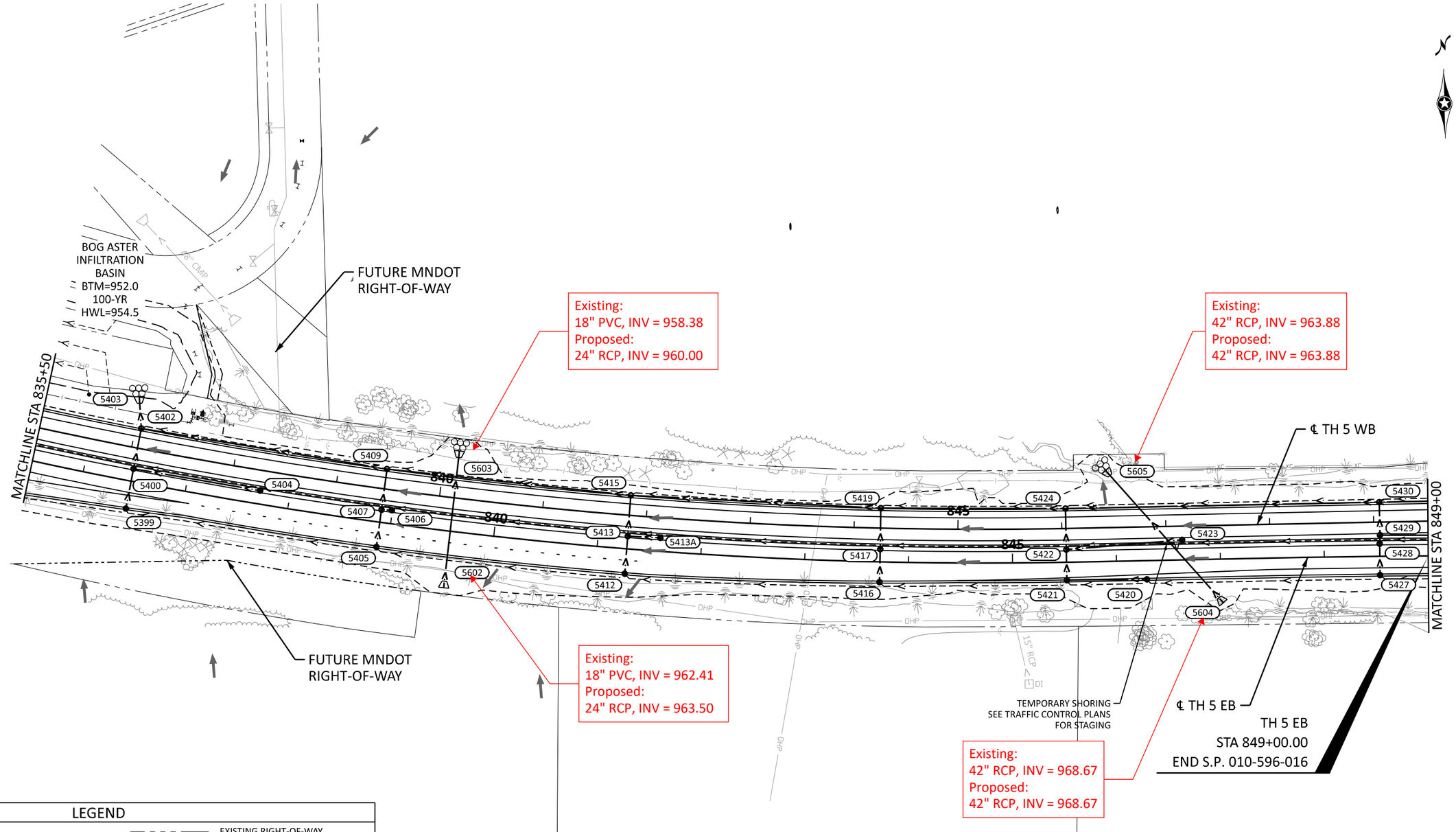

LEGEND

XXXX	DRAINAGE STRUCTURE NUMBER		EXISTING RIGHT-OF-WAY
	SURFACE FLOW DIRECTION		PROPOSED RIGHT-OF-WAY
	PROPOSED/INPLACE APRON		TEMPORARY EASEMENT
	PROPOSED/INPLACE MANHOLE STRUCTURE		CONSTRUCTION LIMITS
	PROPOSED/INPLACE CATCH BASIN STRUCTURE		PROPOSED PERMANENT EASEMENT
	PROPOSED STORM SEWER AND/OR CULVERT		PARCEL LINE
	PROPOSED 4" PERF TP PIPE DRAIN (UNLESS NOTED)		AREA OF ENVIRONMENTAL SENSITIVITY
	INPLACE STORM SEWER AND/OR CULVERT	1	CONNECT INTO EXISTING DRAINAGE STRUCTURE
	RANDOM RIPRAP CL III (UNLESS NOTED)	2	CONNECT TO EXISTING STORM SEWER
		3	ADJUST FRAME & RING CASTING

STRUCTURES ON THIS SHEET

STRUCTURE NO.	PROFILE SHEET NO.	STRUCTURE NO.	PROFILE SHEET NO.	STRUCTURE NO.	PROFILE SHEET NO.	STRUCTURE NO.	PROFILE SHEET NO.
5399	498	5409	498	5421	497	5413A	497
5400	498	5412	499	5422	497	5602	510
5402	498	5413	499	5423	497	5603	510
5403	498	5415	498	5424	496	5604	510
5404	498	5416	497	5427	497	5605	510
5405	498	5417	497	5428	497		
5406	497	5419	498	5429	497		
5407	498	5420	497	5430	496		

0 50 100
SCALE FEET

Default

BOLTON & MENK
12224 NICOLLET AVENUE
BURNSVILLE, MINNESOTA 55337
Phone: (952) 890-0509
Email: Burnsville@bolton-menk.com
www.bolton-menk.com

REV.	BY	DATE

I HEREBY CERTIFY THAT THIS PLAN, SPECIFICATION, OR REPORT WAS PREPARED BY ME OR UNDER MY DIRECT SUPERVISION AND THAT I AM A DULY LICENSED PROFESSIONAL ENGINEER UNDER THE LAWS OF THE STATE OF MINNESOTA.

JOHN L. PERKINS
LIC. NO. 56278 DATE 03/14/2025

DESIGNED GMG
DRAWN MMH
CHECKED JLP

S.P. 1002-124, S.P. 1008-113, S.P. 010-596-014, S.P. 010-596-016, S.P. 010-613-009, S.P. 241-020-003, S.P. 241-090-001

TH 5 RECONSTRUCTION

DRAINAGE PLANS

0T4M00197_pen.tbl
H:\CACO\0T4M00197\CAD\ORD\CACO-0T4M00197\plans\Drainage\cd1002124_300drp012.dgn
pdf-B and W.pltcfg
11:19:10 AM
John.Perkins
7/3/2025

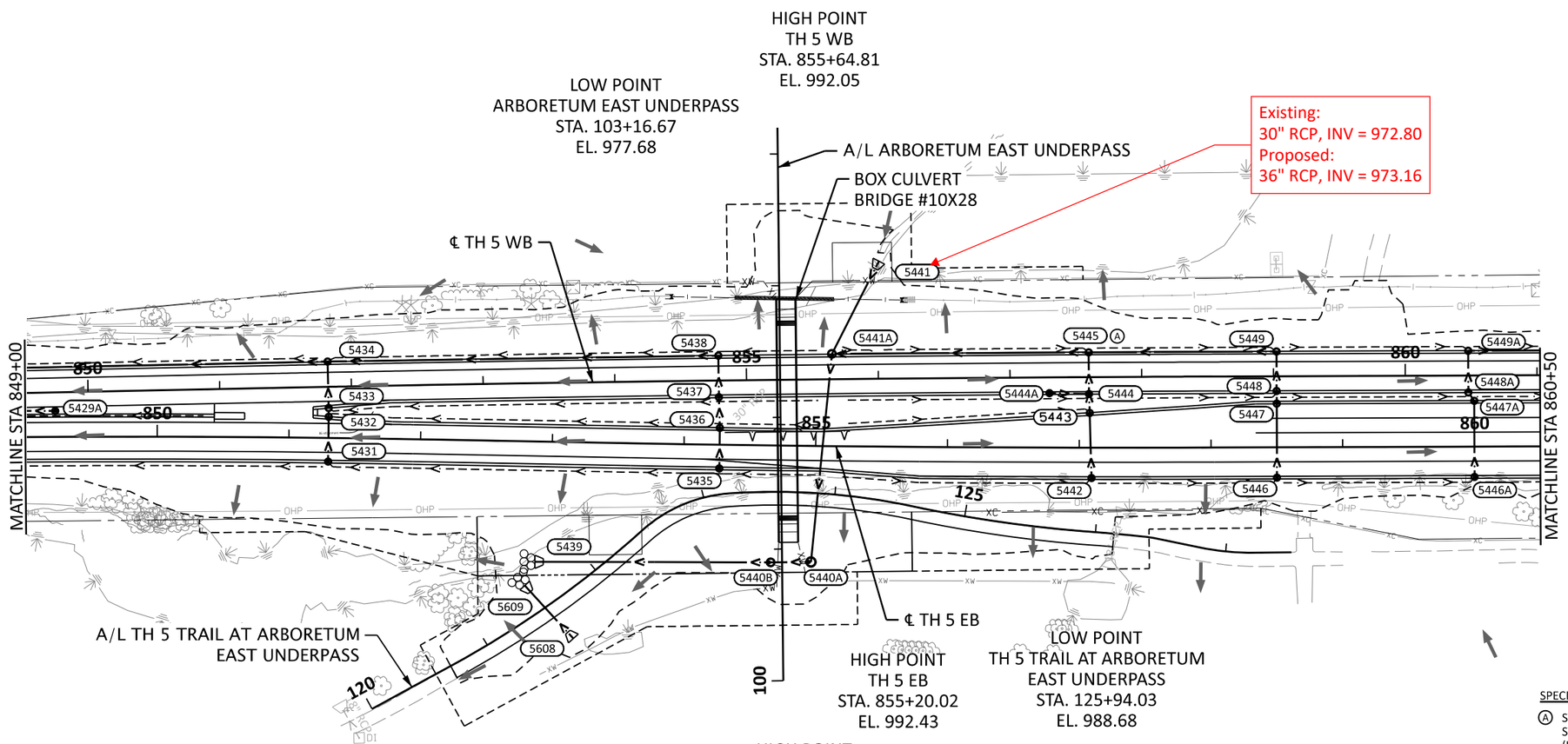

SPECIFIC NOTES:

(A) STRUCTURE TO INCLUDE SUMP AND STRUCTURAL POLLUTION CONTROL DEVICE (INCIDENTAL). SEE DRAINAGE DETAILS.

LEGEND

(XXXX)	DRAINAGE STRUCTURE NUMBER		EXISTING RIGHT-OF-WAY
	SURFACE FLOW DIRECTION		PROPOSED RIGHT-OF-WAY
	PROPOSED/INPLACE APRON		TEMPORARY EASEMENT
	PROPOSED/INPLACE MANHOLE STRUCTURE		CONSTRUCTION LIMITS
	PROPOSED/INPLACE CATCH BASIN STRUCTURE		PROPOSED PERMANENT EASEMENT
	PROPOSED STORM SEWER AND/OR CULVERT		PARCEL LINE
	PROPOSED 4" PERF TP PIPE DRAIN (UNLESS NOTED)		AREA OF ENVIRONMENTAL SENSITIVITY
	INPLACE STORM SEWER AND/OR CULVERT	(1)	CONNECT INTO EXISTING DRAINAGE STRUCTURE
	RANDOM RIPRAP CL III (UNLESS NOTED)	(2)	CONNECT TO EXISTING STORM SEWER
		(3)	ADJUST FRAME & RING CASTING

STRUCTURES ON THIS SHEET

STRUCTURE NO.	PROFILE SHEET NO.	STRUCTURE NO.	PROFILE SHEET NO.	STRUCTURE NO.	PROFILE SHEET NO.
5431	496	5442	500	5444A	500
5432	496	5443	500	5446A	500
5433	496	5444	500	5447A	500
5434	496	5445	499	5448A	500
5435	496	5446	499	5449A	500
5436	496	5447	499	5440A	499
5437	496	5448	499	5440B	499
5438	496	5449	499	5608	510
5439	499	5429A	497	5609	510
5441	499	5441A	499		

0 50 100
SCALE FEET

Default

BOLTON & MENK
12224 NICOLLET AVENUE
BURNSVILLE, MINNESOTA 55337
Phone: (952) 890-0509
Email: Burnsville@bolton-menk.com
www.bolton-menk.com

REV.	BY	DATE

I HEREBY CERTIFY THAT THIS PLAN, SPECIFICATION, OR REPORT WAS PREPARED BY ME OR UNDER MY DIRECT SUPERVISION AND THAT I AM A DULY LICENSED PROFESSIONAL ENGINEER UNDER THE LAWS OF THE STATE OF MINNESOTA.

JOHN L. PERKINS
LIC. NO. 56278 DATE 03/14/2025

DESIGNED GMG
DRAWN MMH
CHECKED JLP

S.P. 1002-124, S.P. 1008-113, S.P. 010-596-014, S.P. 010-596-016, S.P. 010-613-009, S.P. 241-020-003, S.P. 241-090-001

TH 5 RECONSTRUCTION

DRAINAGE PLANS

0T4M00197_pen.tbl
H:\CACO\0T4M00197\CAD\ORD\CACO-0T4M00197\plans\Drainage\cd1002124_300drp013.dgn
pdf-B and W.pltcfg
11:19:11 AM
John.Perkins
7/3/2025

STRUCTURES ON THIS SHEET

STRUCTURE NO.	PROFILE SHEET NO.	STRUCTURE NO.	PROFILE SHEET NO.
5451	501	5517	506
5452	500	5518	508
5453	500	5519	508
5454	501	5520	508
5455	501	5521	507
5456	501	5522	508
5457	501	5523	508
5458	501	5524	508
5459	501	5525	507
5460	502	5528	508
5461	502	5571	507
5462	502	5572	507
5463	502	5450A	500
5464	501	5450B	500
5465	502	5451A	500
5466	502	5451B	501
5467	502	5452A	500
5468	502	5453A	500
5469	502	5453C	500
5470	502	5461A	502
5471	502	5464A	502
5472	501	5472A	502
5473	501	5473A	502
5474	501	5474A	502
5475	501	5475A	501
5476	503	5477A	503
5477	503	5517A	507
5478	503	5518A	508
5479	503	5519A	508
5480	503	5521A	507
5481	503	5525A	507
5482	504	5606	510
5483	504	5607	510
5484	504	6305	503
5485	504	6308	503
5514	506	2367403	503
5515	506	5360732	503
5516	506	5360733	503

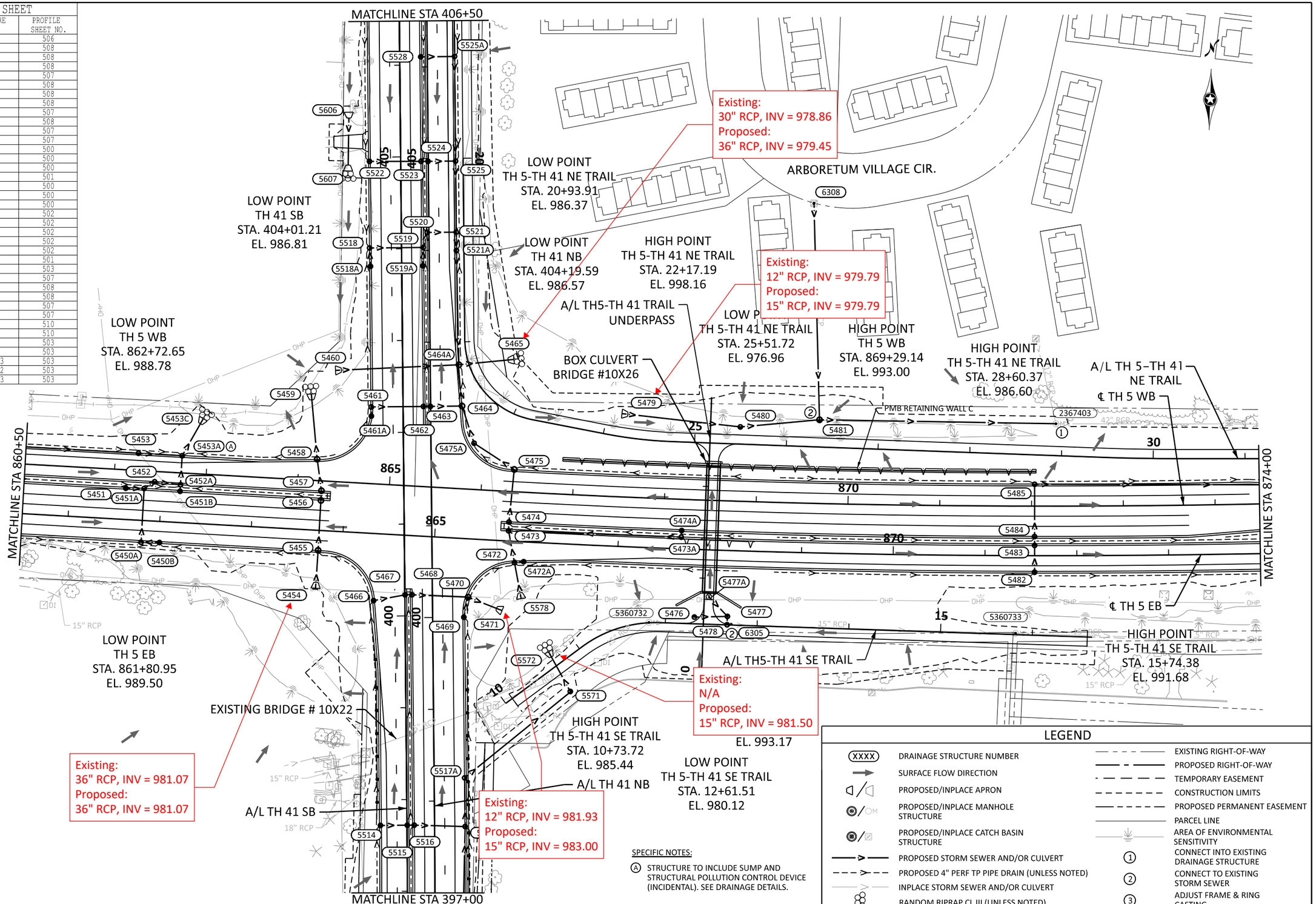

SPECIFIC NOTES:

(A) STRUCTURE TO INCLUDE SUMP AND STRUCTURAL POLLUTION CONTROL DEVICE (INCIDENTAL). SEE DRAINAGE DETAILS.

LEGEND

XXXX	DRAINAGE STRUCTURE NUMBER
	SURFACE FLOW DIRECTION
	PROPOSED/INPLACE APRON
	PROPOSED/INPLACE MANHOLE STRUCTURE
	PROPOSED/INPLACE CATCH BASIN STRUCTURE
	PROPOSED STORM SEWER AND/OR CULVERT
	PROPOSED 4" PERF TP PIPE DRAIN (UNLESS NOTED)
	INPLACE STORM SEWER AND/OR CULVERT
	RANDOM RIPRAP CL III (UNLESS NOTED)
	EXISTING RIGHT-OF-WAY
	PROPOSED RIGHT-OF-WAY
	TEMPORARY EASEMENT
	CONSTRUCTION LIMITS
	PROPOSED PERMANENT EASEMENT
	PARCEL LINE
	AREA OF ENVIRONMENTAL SENSITIVITY
1	CONNECT INTO EXISTING DRAINAGE STRUCTURE
2	CONNECT TO EXISTING STORM SEWER
3	ADJUST FRAME & RING CASTING

0 50 100
SCALE FEET

BOLTON & MENK
12224 NICOLLET AVENUE
BURNSVILLE, MINNESOTA 55337
Phone: (952) 890-0509
Email: Burnsville@bolton-menk.com
www.bolton-menk.com

REV.	BY	DATE

I HEREBY CERTIFY THAT THIS PLAN, SPECIFICATION, OR REPORT WAS PREPARED BY ME OR UNDER MY DIRECT SUPERVISION AND THAT I AM A DULY LICENSED PROFESSIONAL ENGINEER UNDER THE LAWS OF THE STATE OF MINNESOTA.

JOHN L. PERKINS
LIC. NO. 56278 DATE 03/14/2025

DESIGNED GMG
DRAWN MMH
CHECKED JLP

S.P. 1002-124, S.P. 1008-113, S.P. 010-596-014, S.P. 010-596-016, S.P. 010-613-009, S.P. 241-020-003, S.P. 241-090-001

TH 5 RECONSTRUCTION

DRAINAGE PLANS

0T4M00197_pen.tbl
pdf-B and W.pltcfg
11:19:12 AM
H:\CACO\0T4M00197\CAD\ORD\CACO-0T4M00197\plans\Drainage\cd1002124_300drp014.dgn
John.Perkins
7/3/2025
Default

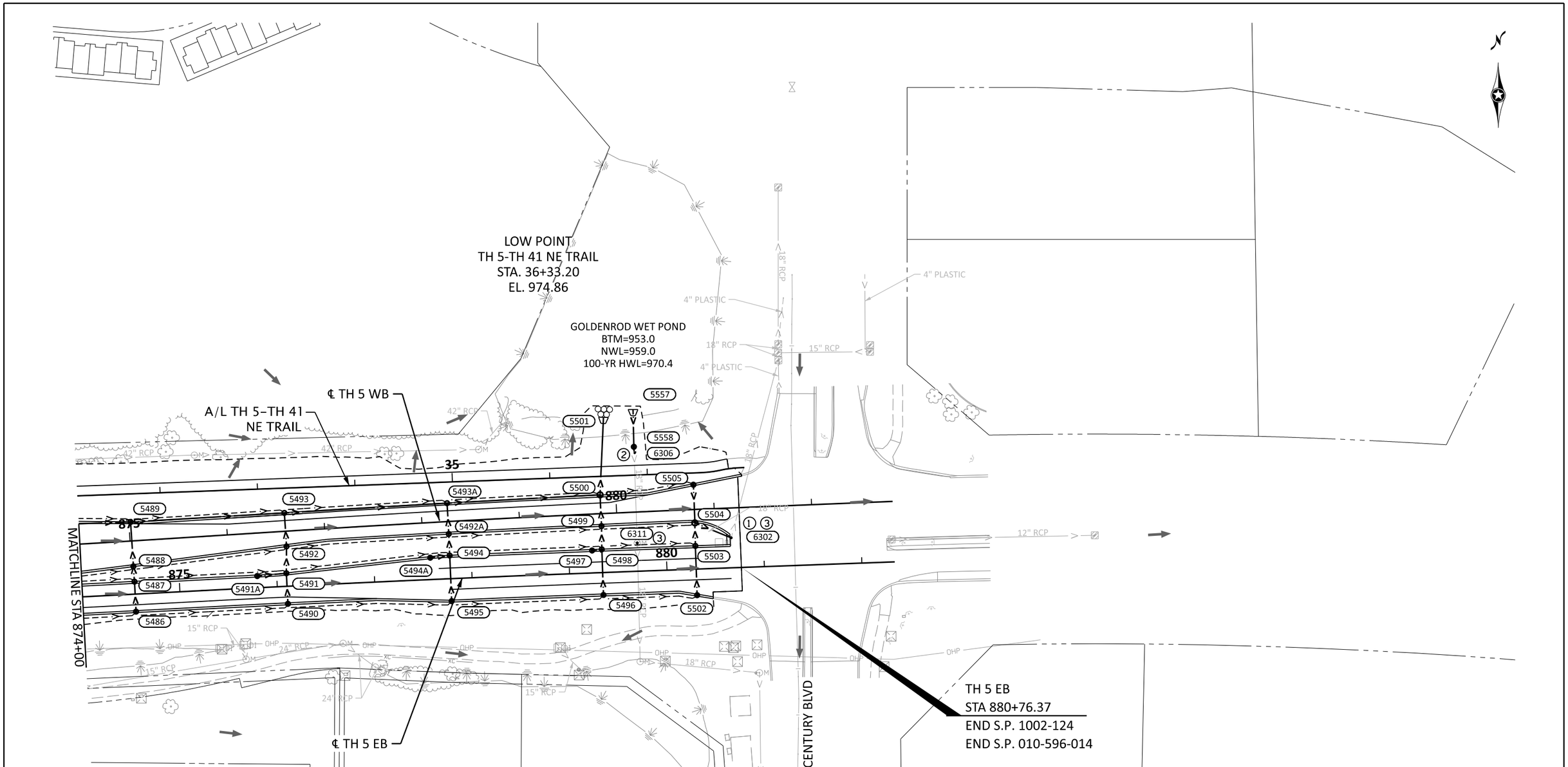

LEGEND

XXXX	DRAINAGE STRUCTURE NUMBER		EXISTING RIGHT-OF-WAY
	SURFACE FLOW DIRECTION		PROPOSED RIGHT-OF-WAY
	PROPOSED/INPLACE APRON		TEMPORARY EASEMENT
	PROPOSED/INPLACE MANHOLE STRUCTURE		CONSTRUCTION LIMITS
	PROPOSED/INPLACE CATCH BASIN STRUCTURE		PROPOSED PERMANENT EASEMENT
	PROPOSED STORM SEWER AND/OR CULVERT		PARCEL LINE
	PROPOSED 4" PERF TP PIPE DRAIN (UNLESS NOTED)		AREA OF ENVIRONMENTAL SENSITIVITY
	INPLACE STORM SEWER AND/OR CULVERT	1	CONNECT INTO EXISTING DRAINAGE STRUCTURE
	RANDOM RIPRAP CL III (UNLESS NOTED)	2	CONNECT TO EXISTING STORM SEWER
		3	ADJUST FRAME & RING CASTING

STRUCTURES ON THIS SHEET

STRUCTURE NO.	PROFILE SHEET NO.	STRUCTURE NO.	PROFILE SHEET NO.	STRUCTURE NO.	PROFILE SHEET NO.
5486	504	5496	505	5557	505
5487	504	5497	505	5558	505
5488	504	5498	505	5491A	505
5489	504	5499	505	5492A	505
5490	504	5500	504	5493A	504
5491	504	5501	504	5494A	505
5492	504	5502	505	6302	505
5493	504	5503	505	6306	505
5494	505	5504	505	6311	505
5495	505	5505	505		

0 50 100
SCALE FEET

BOLTON & MENK
12224 NICOLLET AVENUE
BURNSVILLE, MINNESOTA 55337
Phone: (952) 890-0509
Email: Burnsville@bolton-menk.com
www.bolton-menk.com

REV.	BY	DATE

I HEREBY CERTIFY THAT THIS PLAN, SPECIFICATION, OR REPORT WAS PREPARED BY ME OR UNDER MY DIRECT SUPERVISION AND THAT I AM A DULY LICENSED PROFESSIONAL ENGINEER UNDER THE LAWS OF THE STATE OF MINNESOTA.

JOHN L. PERKINS
LIC. NO. 56278 DATE 03/14/2025

DESIGNED GMG
DRAWN MMH
CHECKED JLP

S.P. 1002-124, S.P. 1008-113, S.P. 010-596-014,
S.P. 010-596-016, S.P. 010-613-009, S.P. 241-020-003, S.P. 241-090-001

TH 5 RECONSTRUCTION

DRAINAGE PLANS

0T4M00197_pen.tbl
H:\CACO\0T4M00197\CAD\ORD\CACO-0T4M00197\plans\Drainage\cd1002124_300drp015.dgn
pdf-B and W.pltcfg
11:19:13 AM
John.Perkins
7/3/2025
Default

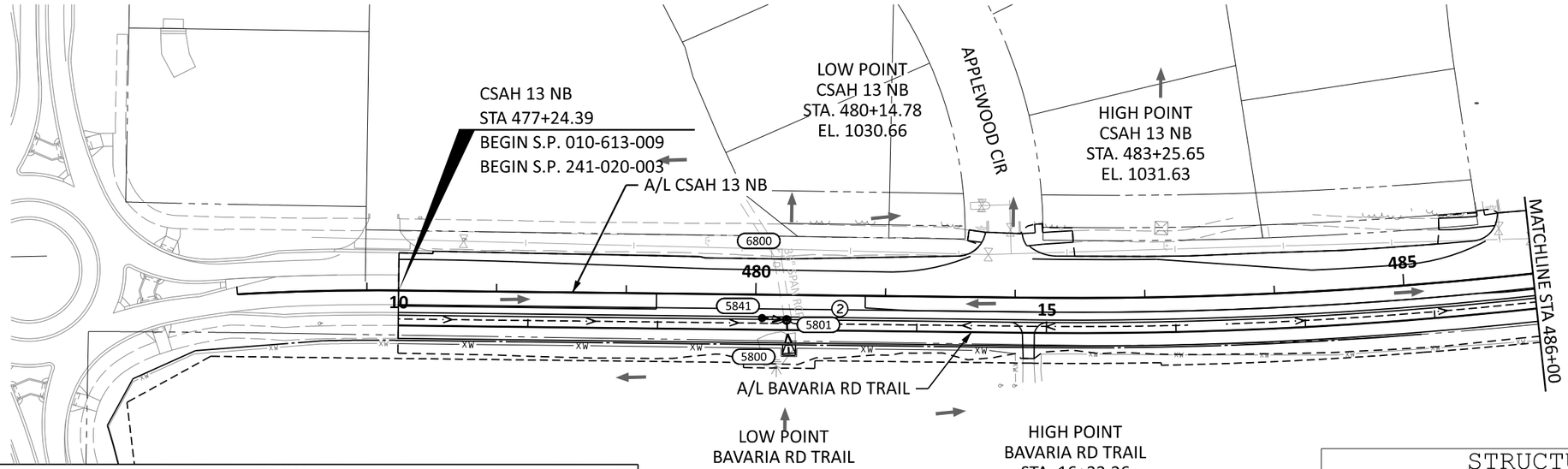

LEGEND

XXXX	DRAINAGE STRUCTURE NUMBER
	SURFACE FLOW DIRECTION
	PROPOSED/INPLACE APRON
	PROPOSED/INPLACE MANHOLE STRUCTURE
	PROPOSED/INPLACE CATCH BASIN STRUCTURE
	PROPOSED STORM SEWER AND/OR CULVERT
	PROPOSED 4" PERF TP PIPE DRAIN (UNLESS NOTED)
	INPLACE STORM SEWER AND/OR CULVERT
	RANDOM RIPRAP CL III (UNLESS NOTED)
	EXISTING RIGHT-OF-WAY
	PROPOSED RIGHT-OF-WAY
	TEMPORARY EASEMENT
	CONSTRUCTION LIMITS
	PROPOSED PERMANENT EASEMENT
	PARCEL LINE
	AREA OF ENVIRONMENTAL SENSITIVITY
1	CONNECT INTO EXISTING DRAINAGE STRUCTURE
2	CONNECT TO EXISTING STORM SEWER
3	ADJUST FRAME & RING CASTING

STRUCTURES ON THIS SHEET

STRUCTURE NO.	PROFILE SHEET NO.	STRUCTURE NO.	PROFILE SHEET NO.	STRUCTURE NO.	PROFILE SHEET NO.
5800	487	5805	486	5841	487
5801	487	5806	487	5845	484
5802	487	5807	486	5846	486
5803	486	5808	487	6800	487
5804	487	5809	486	6801	487

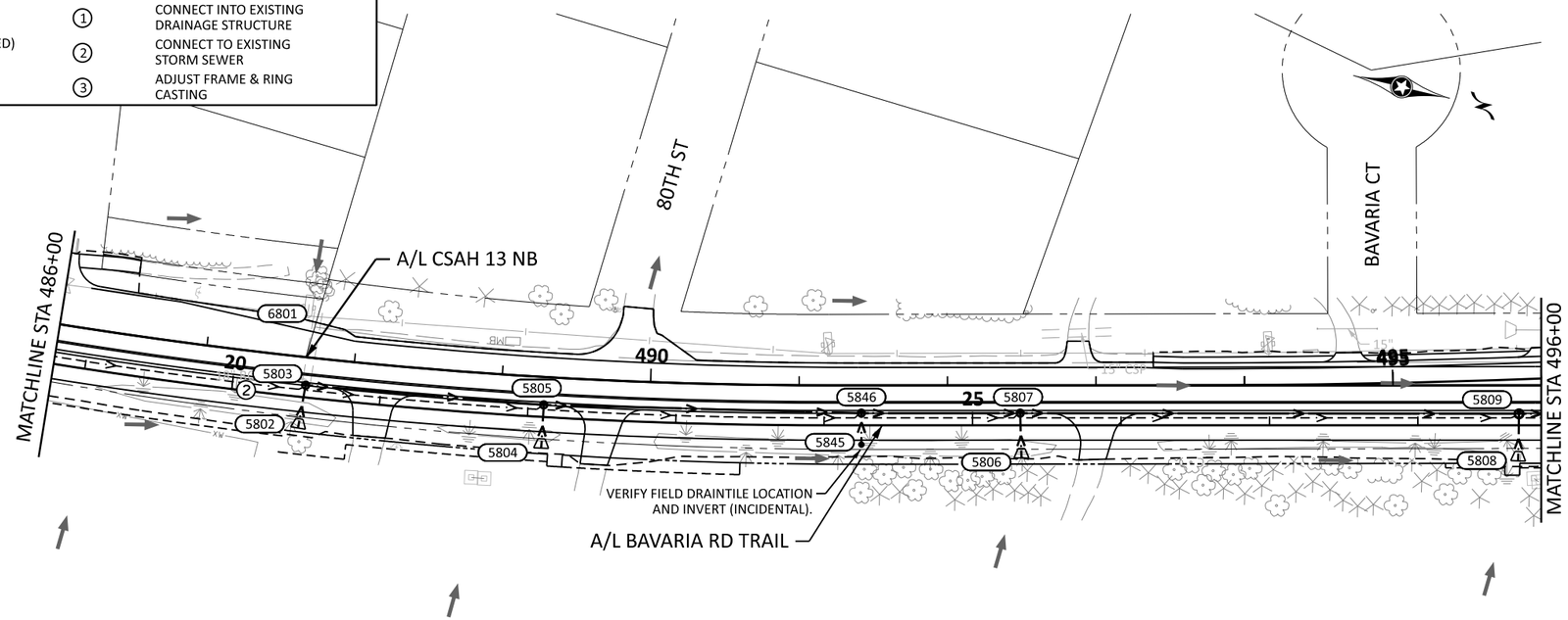

0 50 100
SCALE FEET

Default

BOLTON & MENK
12224 NICOLLET AVENUE
BURNSVILLE, MINNESOTA 55337
Phone: (952) 890-0509
Email: Burnsville@bolton-menk.com
www.bolton-menk.com

REV.	BY	DATE

I HEREBY CERTIFY THAT THIS PLAN, SPECIFICATION, OR REPORT WAS PREPARED BY ME OR UNDER MY DIRECT SUPERVISION AND THAT I AM A DULY LICENSED PROFESSIONAL ENGINEER UNDER THE LAWS OF THE STATE OF MINNESOTA.

JOHN L. PERKINS
LIC. NO. 56278 DATE 03/14/2025

DESIGNED GMG
DRAWN MMH
CHECKED JLP

S.P. 1002-124, S.P. 1008-113, S.P. 010-596-014, S.P. 010-596-016, S.P. 010-613-009, S.P. 241-020-003, S.P. 241-090-001

TH 5 RECONSTRUCTION

DRAINAGE PLANS

0T4M00197_pen.tbl
pdf-B and W.pltcfg
11:19:14 AM
H:\CACO\0T4M00197\CAD\ORD\CACO-0T4M00197\plans\Drainage\cd1002124_300drp016.dgn
John.Perkins
7/3/2025

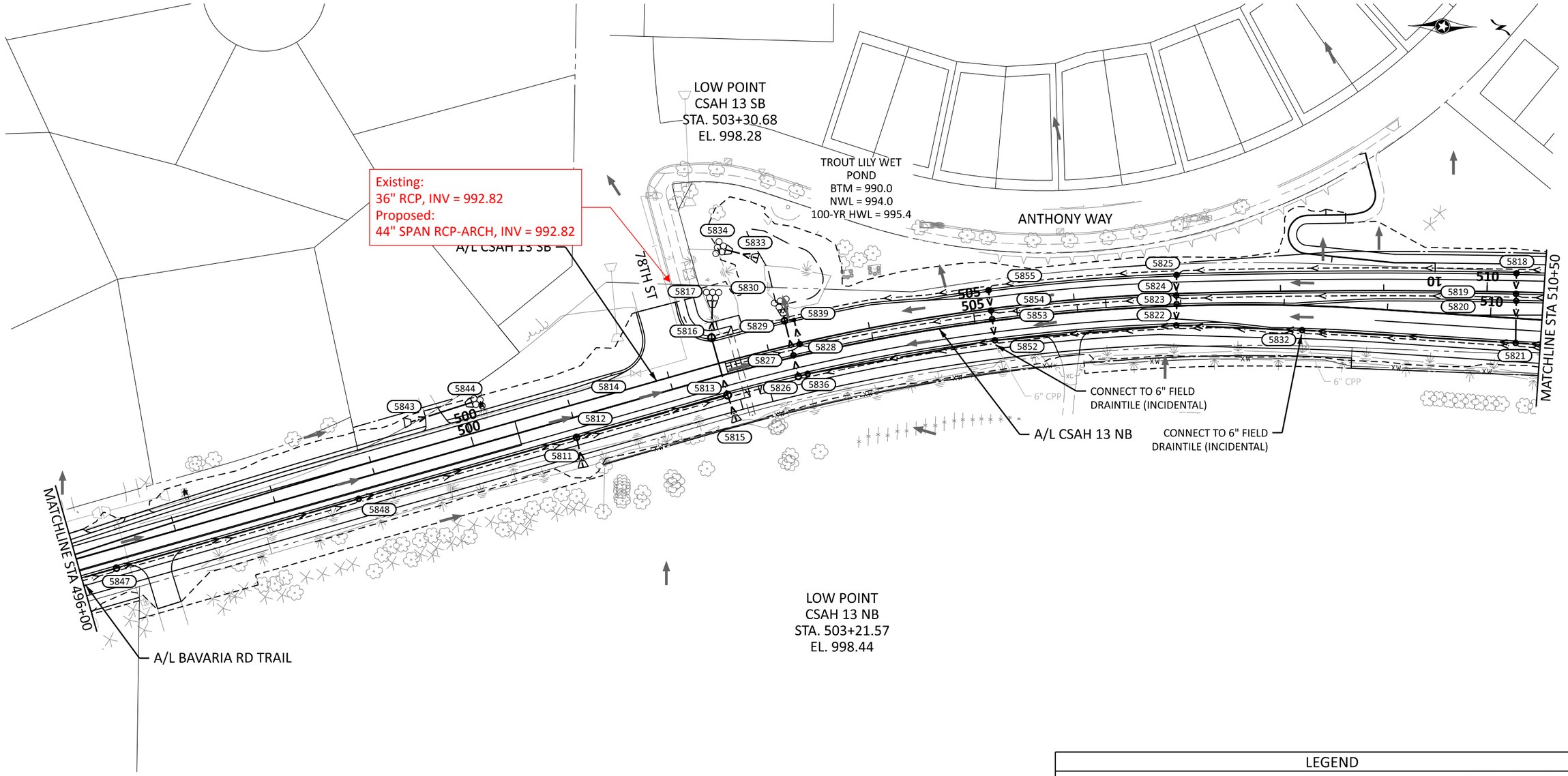

STRUCTURES ON THIS SHEET

STRUCTURE NO.	PROFILE SHEET NO.	STRUCTURE NO.	PROFILE SHEET NO.	STRUCTURE NO.	PROFILE SHEET NO.	STRUCTURE NO.	PROFILE SHEET NO.
5811	485	5820	484	5829	484	5847	486
5812	485	5821	484	5830	484	5848	486
5813	485	5822	484	5832	484	5852	484
5814	485	5823	484	5833	485	5853	485
5815	485	5824	484	5834	485	5854	485
5816	485	5825	484	5836	484	5855	485
5817	485	5826	484	5839	485		
5818	484	5827	484	5843	485		
5819	484	5828	485	5844	485		

LEGEND

XXXX	DRAINAGE STRUCTURE NUMBER		EXISTING RIGHT-OF-WAY
	SURFACE FLOW DIRECTION		PROPOSED RIGHT-OF-WAY
	PROPOSED/INPLACE APRON		TEMPORARY EASEMENT
OM	PROPOSED/INPLACE MANHOLE STRUCTURE		CONSTRUCTION LIMITS
	PROPOSED/INPLACE CATCH BASIN STRUCTURE		PROPOSED PERMANENT EASEMENT
	PROPOSED STORM SEWER AND/OR CULVERT		PARCEL LINE
	PROPOSED 4" PERF TP PIPE DRAIN (UNLESS NOTED)		AREA OF ENVIRONMENTAL SENSITIVITY
	INPLACE STORM SEWER AND/OR CULVERT	1	CONNECT INTO EXISTING DRAINAGE STRUCTURE
	RANDOM RIPRAP CL III (UNLESS NOTED)	2	CONNECT TO EXISTING STORM SEWER
		3	ADJUST FRAME & RING CASTING

0 50 100
SCALE FEET

BOLTON & MENK
12224 NICOLLET AVENUE
BURNSVILLE, MINNESOTA 55337
Phone: (952) 890-0509
Email: Burnsville@bolton-menk.com
www.bolton-menk.com

REV.	BY	DATE

I HEREBY CERTIFY THAT THIS PLAN, SPECIFICATION, OR REPORT WAS PREPARED BY ME OR UNDER MY DIRECT SUPERVISION AND THAT I AM A DULY LICENSED PROFESSIONAL ENGINEER UNDER THE LAWS OF THE STATE OF MINNESOTA.

JOHN L. PERKINS
LIC. NO. 56278 DATE 03/14/2025

DESIGNED GMG
DRAWN MMH
CHECKED JLP

S.P. 1002-124, S.P. 1008-113, S.P. 010-596-014, S.P. 010-596-016, S.P. 010-613-009, S.P. 241-020-003, S.P. 241-090-001

TH 5 RECONSTRUCTION

DRAINAGE PLANS

SHEET 446 OF 729

0T4M00197_pen.tbl
H:\CACO\0T4M00197\CAD\ORD\CACO-0T4M00197\plans\Drainage\cd1002124_300drp017.dgn
pdf-B and W.pltcfg 11:19:15 AM
John.Perkins 7/3/2025
Default

LEGEND

XXXX	DRAINAGE STRUCTURE NUMBER
	SURFACE FLOW DIRECTION
	PROPOSED/INPLACE APRON
	PROPOSED/INPLACE MANHOLE STRUCTURE
	PROPOSED/INPLACE CATCH BASIN STRUCTURE
	PROPOSED STORM SEWER AND/OR CULVERT
	PROPOSED 4" PERF TP PIPE DRAIN (UNLESS NOTED)
	INPLACE STORM SEWER AND/OR CULVERT
	RANDOM RIPRAP CL III (UNLESS NOTED)
	EXISTING RIGHT-OF-WAY
	PROPOSED RIGHT-OF-WAY
	TEMPORARY EASEMENT
	CONSTRUCTION LIMITS
	PROPOSED PERMANENT EASEMENT
	PARCEL LINE
	AREA OF ENVIRONMENTAL SENSITIVITY
1	CONNECT INTO EXISTING DRAINAGE STRUCTURE
2	CONNECT TO EXISTING STORM SEWER
3	ADJUST FRAME & RING CASTING

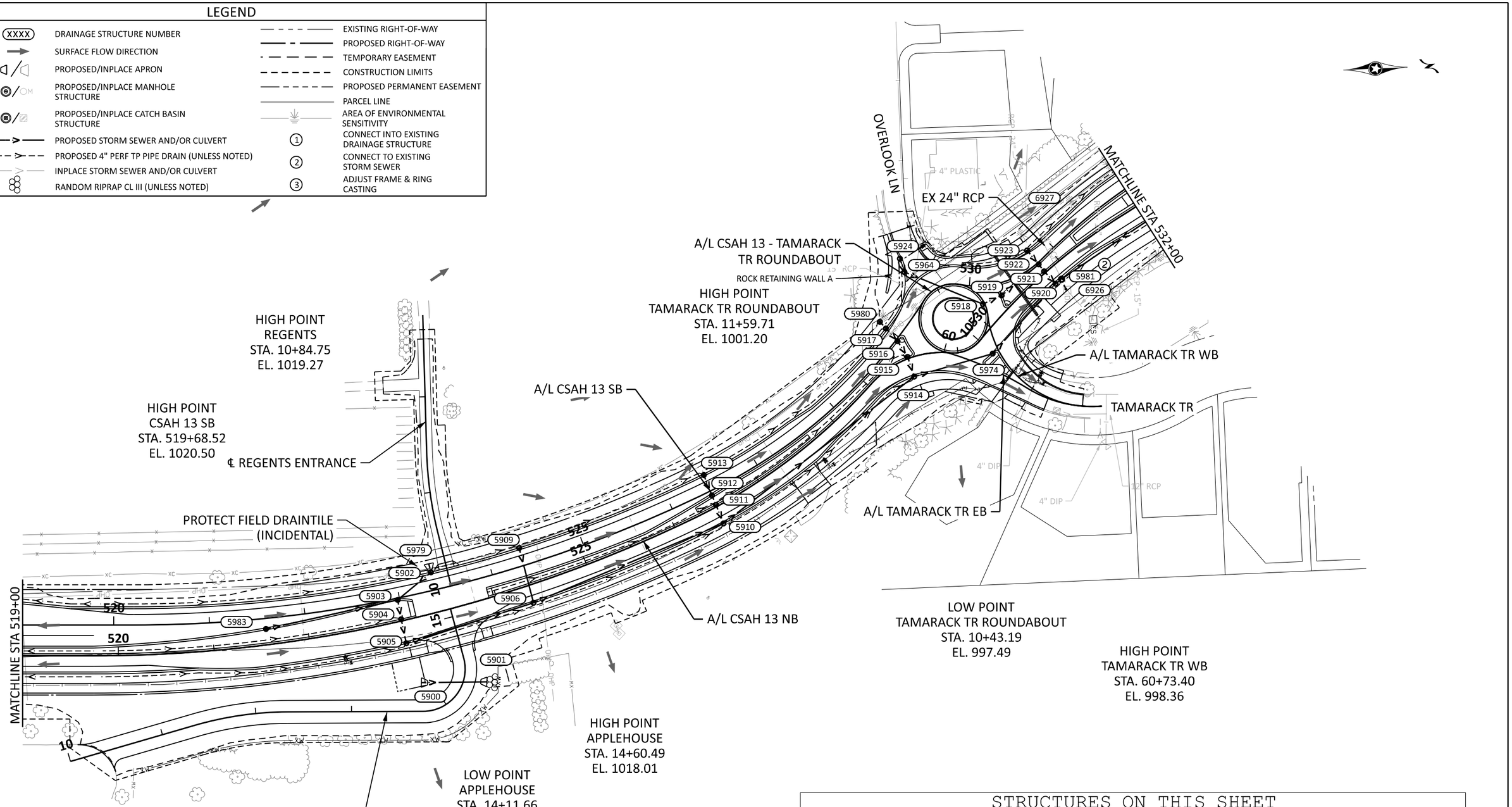

STRUCTURES ON THIS SHEET

STRUCTURE NO.	PROFILE SHEET NO.	STRUCTURE NO.	PROFILE SHEET NO.	STRUCTURE NO.	PROFILE SHEET NO.	STRUCTURE NO.	PROFILE SHEET NO.
5900	483	5910	482	5918	483	5974	482
5901	483	5911	483	5919	483	5979	482
5902	482	5912	483	5920	482	5980	483
5903	482	5913	483	5921	483	5981	482
5904	483	5914	482	5922	483	5983	482
5905	483	5915	483	5923	483	6926	482
5906	482	5916	483	5924	483		
5909	511	5917	483	5964	483		

0 50 100
SCALE FEET

BOLTON & MENK
12224 NICOLLET AVENUE
BURNSVILLE, MINNESOTA 55337
Phone: (952) 890-0509
Email: Burnsville@bolton-menk.com
www.bolton-menk.com

REV.	BY	DATE

I HEREBY CERTIFY THAT THIS PLAN, SPECIFICATION, OR REPORT WAS PREPARED BY ME OR UNDER MY DIRECT SUPERVISION AND THAT I AM A DULY LICENSED PROFESSIONAL ENGINEER UNDER THE LAWS OF THE STATE OF MINNESOTA.

JOHN L. PERKINS
LIC. NO. 56278 DATE 03/14/2025

DESIGNED GMG
DRAWN MMH
CHECKED JLP

S.P. 1002-124, S.P. 1008-113, S.P. 010-596-014, S.P. 010-596-016, S.P. 010-613-009, S.P. 241-020-003, S.P. 241-090-001

TH 5 RECONSTRUCTION

DRAINAGE PLANS

0T4M00197_pen.tbl
H:\CACO\0T4M00197\CAD\ORD\CACO-0T4M00197\plans\Drainage\cd1002124_300drp018.dgn
pdf-B and W.pltcfg
11:19:16 AM
John.Perkins
7/3/2025
Default

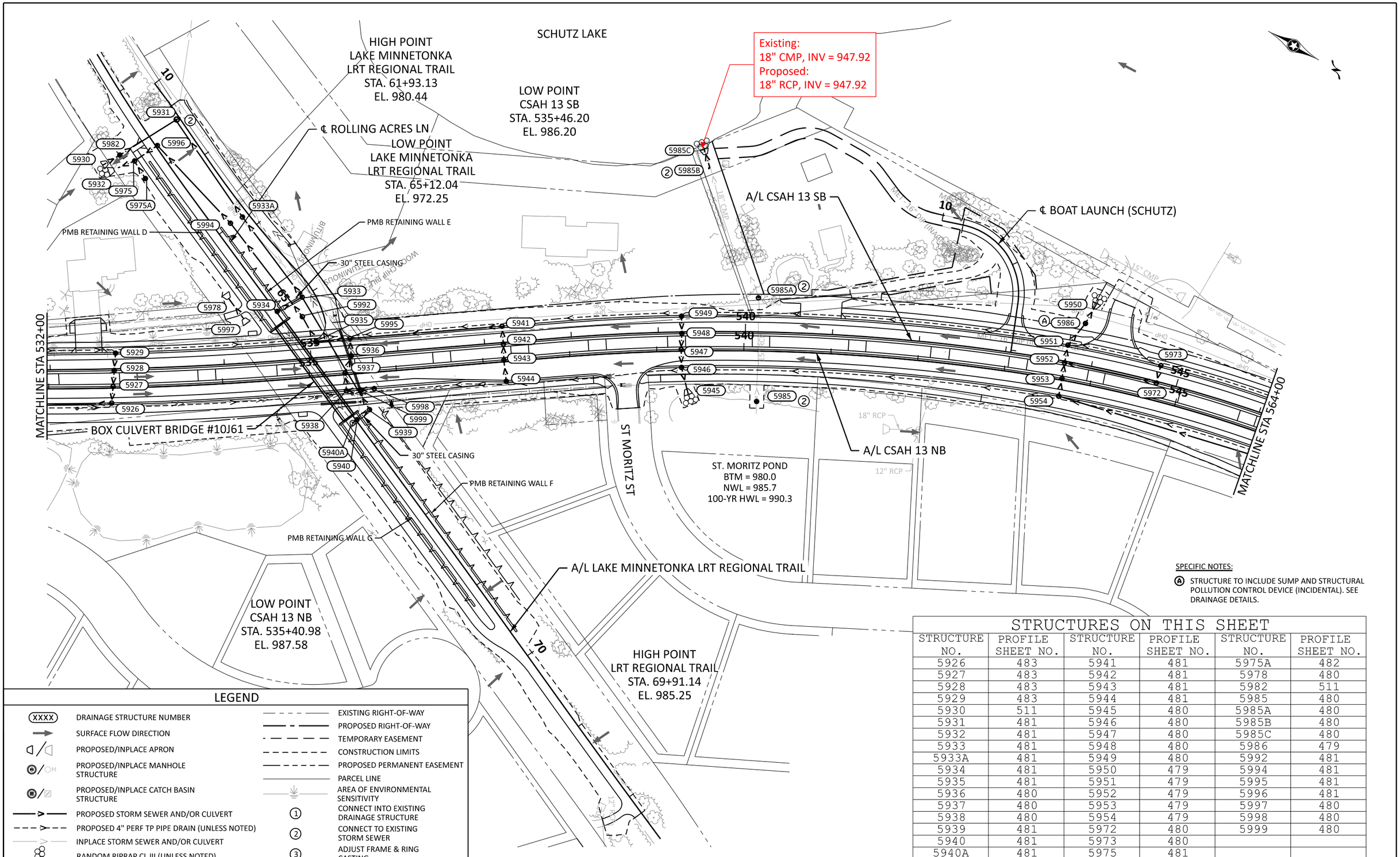

SPECIFIC NOTES:

Ⓐ STRUCTURE TO INCLUDE SUMP AND STRUCTURAL POLLUTION CONTROL DEVICE (INCIDENTAL). SEE DRAINAGE DETAILS.

STRUCTURES ON THIS SHEET

STRUCTURE NO.	PROFILE SHEET NO.	STRUCTURE NO.	PROFILE SHEET NO.	STRUCTURE NO.	PROFILE SHEET NO.
5926	483	5941	481	5975A	482
5927	483	5942	481	5978	480
5928	483	5943	481	5982	511
5929	483	5944	481	5985	480
5930	511	5945	480	5985A	480
5931	481	5946	480	5985B	480
5932	481	5947	480	5985C	480
5933	481	5948	480	5986	479
5933A	481	5949	480	5992	481
5934	481	5950	479	5994	481
5935	481	5951	479	5995	481
5936	480	5952	479	5996	481
5937	480	5953	479	5997	480
5938	480	5954	479	5998	480
5939	481	5972	480	5999	480
5940	481	5973	480		
5940A	481	5975	481		

LEGEND

- XXXX — DRAINAGE STRUCTURE NUMBER
- SURFACE FLOW DIRECTION
- PROPOSED/INPLACE APRON
- PROPOSED/INPLACE MANHOLE STRUCTURE
- PROPOSED/INPLACE CATCH BASIN STRUCTURE
- PROPOSED STORM SEWER AND/OR CULVERT
- PROPOSED 4" PERF TP PIPE DRAIN (UNLESS NOTED)
- INPLACE STORM SEWER AND/OR CULVERT
- RANDOM RIPRAP CL III (UNLESS NOTED)
- EXISTING RIGHT-OF-WAY
- PROPOSED RIGHT-OF-WAY
- TEMPORARY EASEMENT
- CONSTRUCTION LIMITS
- PROPOSED PERMANENT EASEMENT
- PARCEL LINE
- AREA OF ENVIRONMENTAL SENSITIVITY
- (1) CONNECT INTO EXISTING DRAINAGE STRUCTURE
- (2) CONNECT TO EXISTING STORM SEWER
- (3) ADJUST FRAME & RING CASTING

0 50 100
SCALE FEET

Default

BOLTON & MENK
12224 NICOLLET AVENUE
BURNSVILLE, MINNESOTA 55337
Phone: (952) 890-0509
Email: Burnsville@bolton-menk.com
www.bolton-menk.com

REV.	BY	DATE

I HEREBY CERTIFY THAT THIS PLAN, SPECIFICATION, OR REPORT WAS PREPARED BY ME OR UNDER MY DIRECT SUPERVISION AND THAT I AM A DULY LICENSED PROFESSIONAL ENGINEER UNDER THE LAWS OF THE STATE OF MINNESOTA.

JOHN L. PERKINS
LIC. NO. 56278 DATE 03/14/2025

DESIGNED GMG
DRAWN MMH
CHECKED JLP

S.P. 1002-124, S.P. 1008-113, S.P. 010-596-014, S.P. 010-596-016, S.P. 010-613-009, S.P. 241-020-003, S.P. 241-090-001

TH 5 RECONSTRUCTION

DRAINAGE PLANS

0T4M00197_pen.tbl
H:\CACO\0T4M00197\CAD\ORD\CACO-0T4M00197\plans\Drainage\cd1002124_300drp019.dgn
pdf-B and W.pltcfg
11:19:17 AM
John.Perkins
7/3/2025

LEGEND

(XXXX)	DRAINAGE STRUCTURE NUMBER
	SURFACE FLOW DIRECTION
	PROPOSED/INPLACE APRON
	PROPOSED/INPLACE MANHOLE STRUCTURE
	PROPOSED/INPLACE CATCH BASIN STRUCTURE
	PROPOSED STORM SEWER AND/OR CULVERT
	PROPOSED 4" PERF TP PIPE DRAIN (UNLESS NOTED)
	INPLACE STORM SEWER AND/OR CULVERT
	RANDOM RIPRAP CL III (UNLESS NOTED)
	EXISTING RIGHT-OF-WAY
	PROPOSED RIGHT-OF-WAY
	TEMPORARY EASEMENT
	CONSTRUCTION LIMITS
	PROPOSED PERMANENT EASEMENT
	PARCEL LINE
	AREA OF ENVIRONMENTAL SENSITIVITY
1	CONNECT INTO EXISTING DRAINAGE STRUCTURE
2	CONNECT TO EXISTING STORM SEWER
3	ADJUST FRAME & RING CASTING

UNDERDRAIN TABULATION - CSAH 13 BIOFILTRATION DITCH

STRUCTURE NUMBER	RIM ELEVATION	INVERT ELEVATION	PIPE SLOPE
C031	1020.50	1018.50	1.50%
5977	1019.70	1016.40	

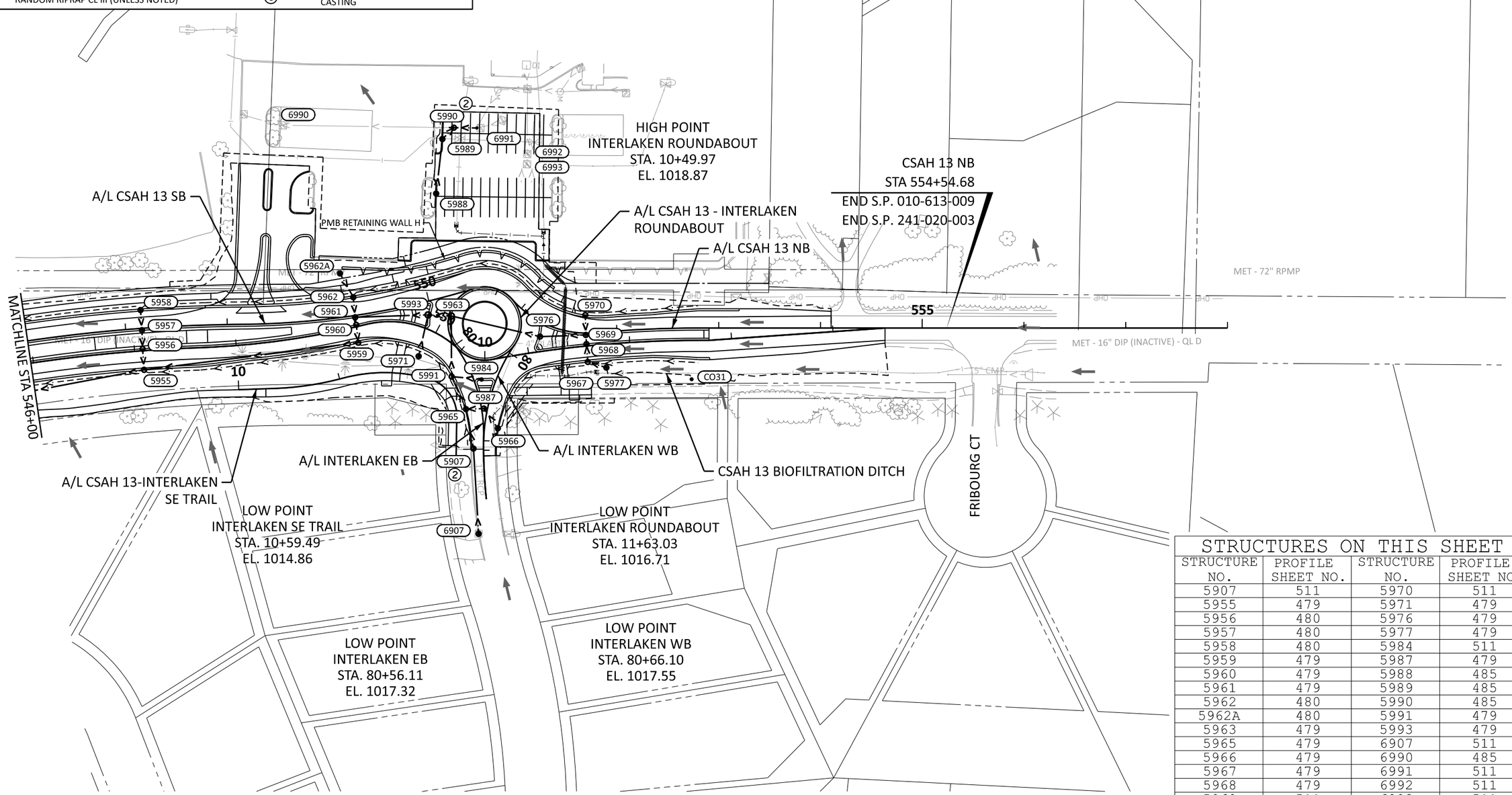

STRUCTURES ON THIS SHEET

STRUCTURE NO.	PROFILE SHEET NO.	STRUCTURE NO.	PROFILE SHEET NO.
5907	511	5970	511
5955	479	5971	479
5956	480	5976	479
5957	480	5977	479
5958	480	5984	511
5959	479	5987	479
5960	479	5988	485
5961	479	5989	485
5962	480	5990	485
5962A	480	5991	479
5963	479	5993	479
5965	479	6907	511
5966	479	6990	485
5967	479	6991	511
5968	479	6992	511
5969	511	6993	511

0 50 100
SCALE FEET

BOLTON & MENK
12224 NICOLLET AVENUE
BURNSVILLE, MINNESOTA 55337
Phone: (952) 890-0509
Email: Burnsville@bolton-menk.com
www.bolton-menk.com

REV.	BY	DATE

I HEREBY CERTIFY THAT THIS PLAN, SPECIFICATION, OR REPORT WAS PREPARED BY ME OR UNDER MY DIRECT SUPERVISION AND THAT I AM A DULY LICENSED PROFESSIONAL ENGINEER UNDER THE LAWS OF THE STATE OF MINNESOTA.

JOHN L. PERKINS
LIC. NO. 56278 DATE 03/14/2025

DESIGNED GMG
DRAWN MMH
CHECKED JLP

S.P. 1002-124, S.P. 1008-113, S.P. 010-596-014,
S.P. 010-596-016, S.P. 010-613-009, S.P. 241-020-003, S.P. 241-090-001

TH 5 RECONSTRUCTION

DRAINAGE PLANS

0T4M00197_pen.tbl
pdf-B and W.pltcfg
11:19:18 AM
H:\CACO\0T4M00197\CAD\ORD\CACO-0T4M00197\plans\Drainage\cd1002124_300drp020.dgn
John.Perkins
7/3/2025
Default

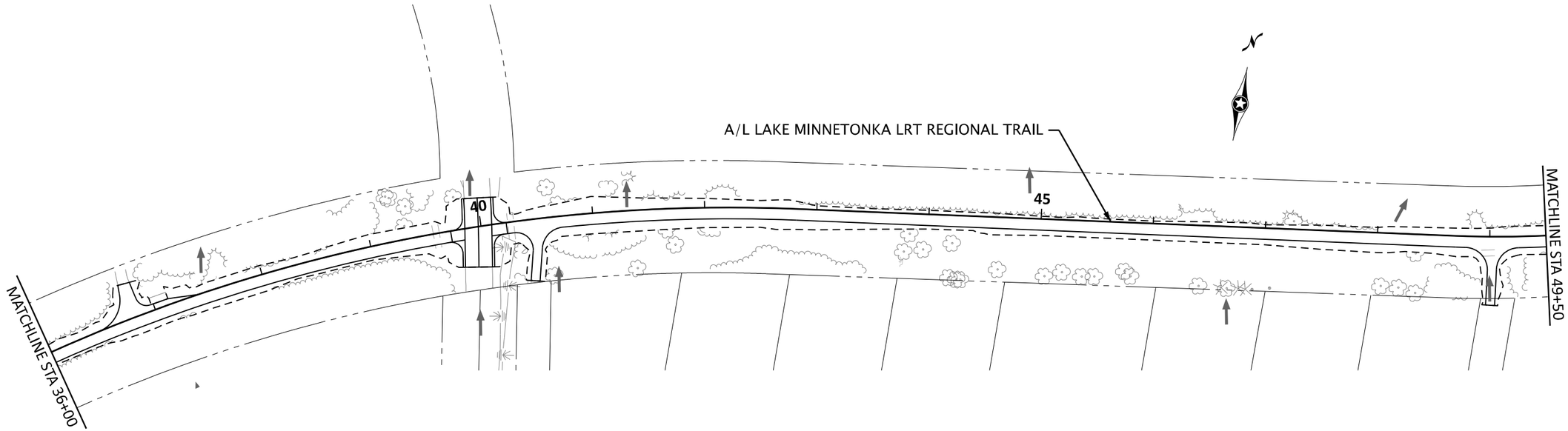

LEGEND

(XXXX)	DRAINAGE STRUCTURE NUMBER
	SURFACE FLOW DIRECTION
	PROPOSED/INPLACE APRON
	PROPOSED/INPLACE MANHOLE STRUCTURE
	PROPOSED/INPLACE CATCH BASIN STRUCTURE
	PROPOSED STORM SEWER AND/OR CULVERT
	PROPOSED 4" PERF TP PIPE DRAIN (UNLESS NOTED)
	INPLACE STORM SEWER AND/OR CULVERT
	RANDOM RIPRAP CL III (UNLESS NOTED)
	EXISTING RIGHT-OF-WAY
	PROPOSED RIGHT-OF-WAY
	TEMPORARY EASEMENT
	CONSTRUCTION LIMITS
	PROPOSED PERMANENT EASEMENT
	PARCEL LINE
	AREA OF ENVIRONMENTAL SENSITIVITY
1	CONNECT INTO EXISTING DRAINAGE STRUCTURE
2	CONNECT TO EXISTING STORM SEWER
3	ADJUST FRAME & RING CASTING

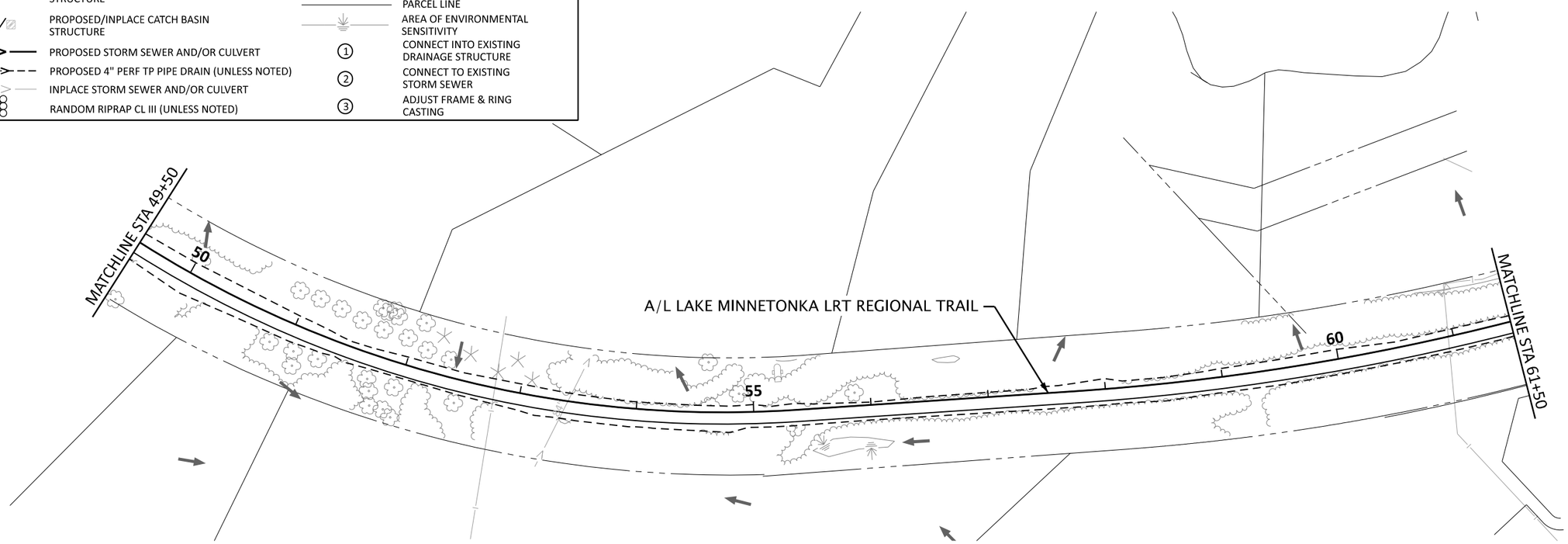

0 50 100
SCALE FEET

Default

BOLTON & MENK
12224 NICOLLET AVENUE
BURNSVILLE, MINNESOTA 55337
Phone: (952) 890-0509
Email: Burnsville@bolton-menk.com
www.bolton-menk.com

REV.	BY	DATE

I HEREBY CERTIFY THAT THIS PLAN, SPECIFICATION, OR REPORT WAS PREPARED BY ME OR UNDER MY DIRECT SUPERVISION AND THAT I AM A DULY LICENSED PROFESSIONAL ENGINEER UNDER THE LAWS OF THE STATE OF MINNESOTA.

JOHN L. PERKINS
LIC. NO. 56278 DATE 03/14/2025

DESIGNED GMG
DRAWN MMH
CHECKED JLP

S.P. 1002-124, S.P. 1008-113, S.P. 010-596-014, S.P. 010-596-016, S.P. 010-613-009, S.P. 241-020-003, S.P. 241-090-001

TH 5 RECONSTRUCTION

DRAINAGE PLANS

SHEET 450 OF 729

0T4M00197_pen.tbl
pdf-B and W.pltcfg
11:19:19 AM
H:\CACO\0T4M00197\CAD\ORD\CACO-0T4M00197\plans\Drainage\cd1002124_300drp021.dgn
John.Perkins
7/3/2025

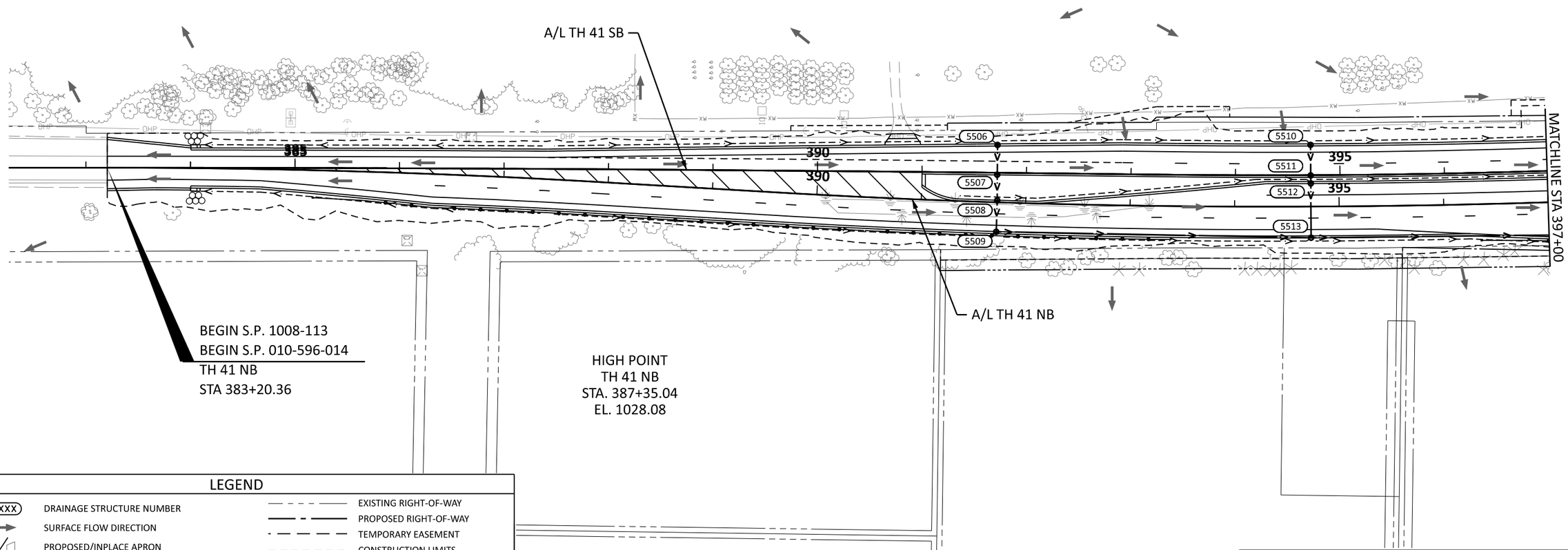

LEGEND

XXXX	DRAINAGE STRUCTURE NUMBER
	SURFACE FLOW DIRECTION
	PROPOSED/INPLACE APRON
	PROPOSED/INPLACE MANHOLE STRUCTURE
	PROPOSED/INPLACE CATCH BASIN STRUCTURE
	PROPOSED STORM SEWER AND/OR CULVERT
	PROPOSED 4" PERF TP PIPE DRAIN (UNLESS NOTED)
	INPLACE STORM SEWER AND/OR CULVERT
	RANDOM RIPRAP CL III (UNLESS NOTED)
	EXISTING RIGHT-OF-WAY
	PROPOSED RIGHT-OF-WAY
	TEMPORARY EASEMENT
	CONSTRUCTION LIMITS
	PROPOSED PERMANENT EASEMENT
	PARCEL LINE
	AREA OF ENVIRONMENTAL SENSITIVITY
1	CONNECT INTO EXISTING DRAINAGE STRUCTURE
2	CONNECT TO EXISTING STORM SEWER
3	ADJUST FRAME & RING CASTING

STRUCTURES ON THIS SHEET

STRUCTURE NO.	PROFILE SHEET NO.	STRUCTURE NO.	PROFILE SHEET NO.
5506	506	5512	506
5507	506	5513	506
5508	506		
5509	506		
5510	506		
5511	506		

0 50 100
SCALE FEET

Default

BOLTON & MENK
12224 NICOLLET AVENUE
BURNSVILLE, MINNESOTA 55337
Phone: (952) 890-0509
Email: Burnsville@bolton-menk.com
www.bolton-menk.com

REV.	BY	DATE

I HEREBY CERTIFY THAT THIS PLAN, SPECIFICATION, OR REPORT WAS PREPARED BY ME OR UNDER MY DIRECT SUPERVISION AND THAT I AM A DULY LICENSED PROFESSIONAL ENGINEER UNDER THE LAWS OF THE STATE OF MINNESOTA.

JOHN L. PERKINS
LIC. NO. 56278 DATE 03/14/2025

DESIGNED GMG
DRAWN MMH
CHECKED JLP

S.P. 1002-124, S.P. 1008-113, S.P. 010-596-014,
S.P. 010-596-016, S.P. 010-613-009, S.P. 241-020-003, S.P. 241-090-001

TH 5 RECONSTRUCTION

DRAINAGE PLANS

0T4M00197_pen.tbl
H:\CACO\0T4M00197\CAD\ORD\CACO-0T4M00197\plans\Drainage\cd1002124_300drp022.dgn
pdf-B and W.pltcfg
11:19:20 AM
John.Perkins
7/3/2025

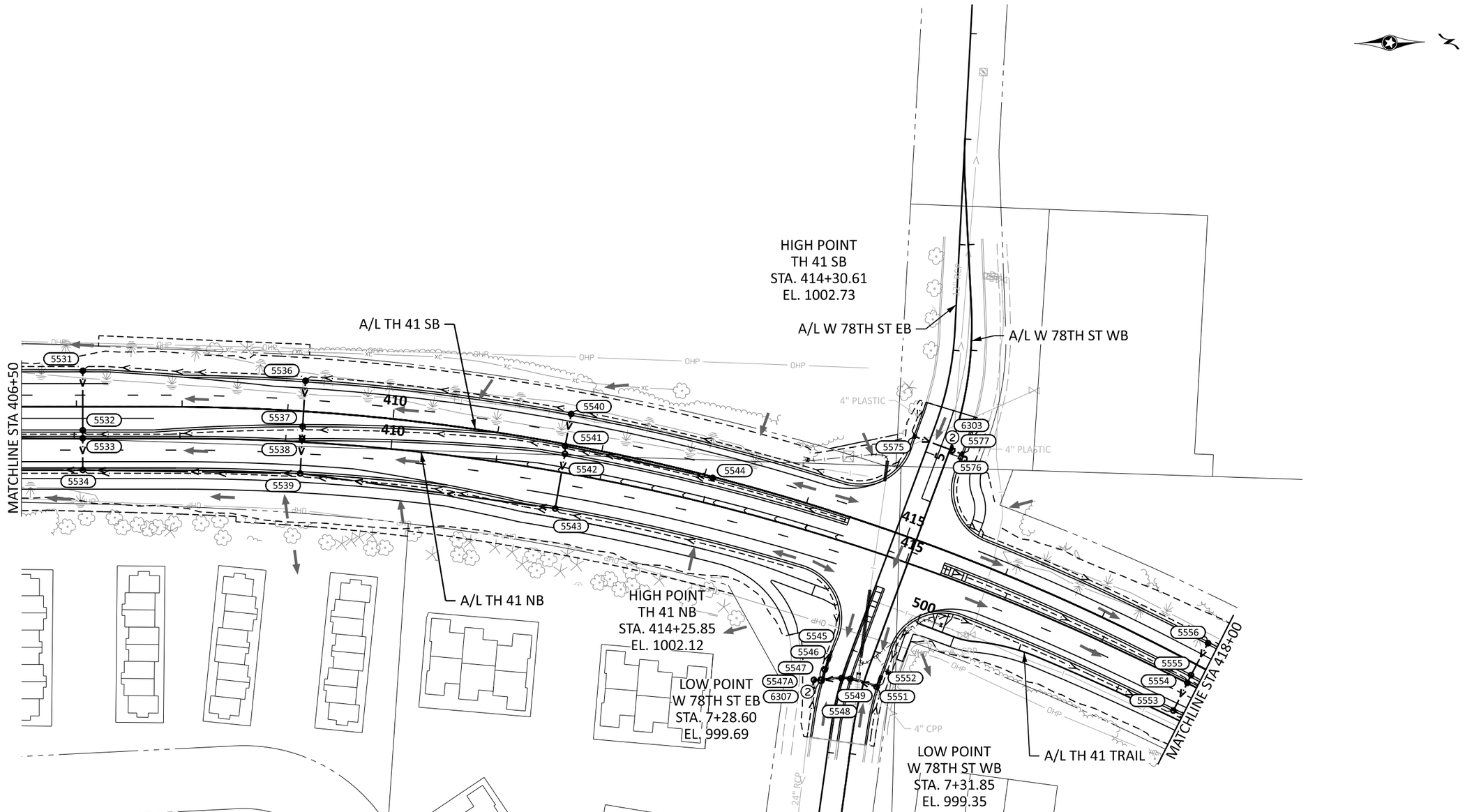

LEGEND

XXXX	DRAINAGE STRUCTURE NUMBER
	SURFACE FLOW DIRECTION
	PROPOSED/INPLACE APRON
	PROPOSED/INPLACE MANHOLE STRUCTURE
	PROPOSED/INPLACE CATCH BASIN STRUCTURE
	PROPOSED STORM SEWER AND/OR CULVERT
	PROPOSED 4" PERF TP PIPE DRAIN (UNLESS NOTED)
	INPLACE STORM SEWER AND/OR CULVERT
	RANDOM RIPRAP CL III (UNLESS NOTED)
	EXISTING RIGHT-OF-WAY
	PROPOSED RIGHT-OF-WAY
	TEMPORARY EASEMENT
	CONSTRUCTION LIMITS
	PROPOSED PERMANENT EASEMENT
	PARCEL LINE
	AREA OF ENVIRONMENTAL SENSITIVITY
1	CONNECT INTO EXISTING DRAINAGE STRUCTURE
2	CONNECT TO EXISTING STORM SEWER
3	ADJUST FRAME & RING CASTING

STRUCTURES ON THIS SHEET

STRUCTURE NO.	PROFILE SHEET NO.	STRUCTURE NO.	PROFILE SHEET NO.	STRUCTURE NO.	PROFILE SHEET NO.
5531	508	5542	507	5553	509
5532	508	5543	507	5554	509
5533	508	5544	508	5555	509
5534	507	5545	509	5556	509
5536	508	5546	509	5575	509
5537	508	5547	509	5576	509
5538	508	5548	509	5577	509
5539	507	5549	509	5547A	509
5540	507	5551	509	6303	509
5541	507	5552	509	6307	509

0 50 100
SCALE FEET

BOLTON & MENK
12224 NICOLLET AVENUE
BURNSVILLE, MINNESOTA 55337
Phone: (952) 890-0509
Email: Burnsville@bolton-menk.com
www.bolton-menk.com

REV.	BY	DATE

I HEREBY CERTIFY THAT THIS PLAN, SPECIFICATION, OR REPORT WAS PREPARED BY ME OR UNDER MY DIRECT SUPERVISION AND THAT I AM A DULY LICENSED PROFESSIONAL ENGINEER UNDER THE LAWS OF THE STATE OF MINNESOTA.

JOHN L. PERKINS
LIC. NO. 56278 DATE 03/14/2025

DESIGNED GMG
DRAWN MMH
CHECKED JLP

S.P. 1002-124, S.P. 1008-113, S.P. 010-596-014,
S.P. 010-596-016, S.P. 010-613-009, S.P. 241-020-003, S.P. 241-090-001

TH 5 RECONSTRUCTION

DRAINAGE PLANS

0T4M00197_pen.tbl
H:\CACO\0T4M00197\CAD\ORD\CACO-0T4M00197\plans\Drainage\cd1002124_300drp023.dgn
pdf-B and W.pltcfg
11:19:24 AM
John.Perkins
7/3/2025
Default

UNDERDRAIN TABULATION - TH 41 BIOFILTRATION DITCH

STRUCTURE NUMBER	RIM ELEVATION	INVERT ELEVATION	PIPE SLOPE
C030	995.00	993.00	2.14%
HW01	N/A	990.00	

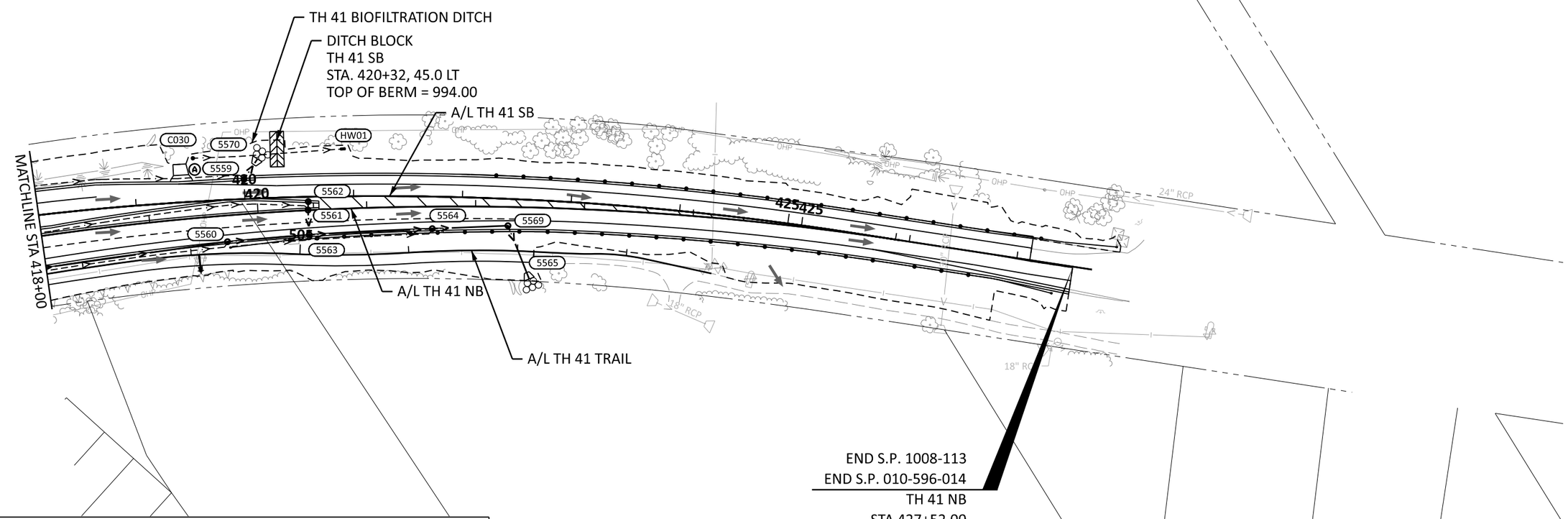

LEGEND

XXXX	DRAINAGE STRUCTURE NUMBER
	SURFACE FLOW DIRECTION
	PROPOSED/INPLACE APRON
	PROPOSED/INPLACE MANHOLE STRUCTURE
	PROPOSED/INPLACE CATCH BASIN STRUCTURE
	PROPOSED STORM SEWER AND/OR CULVERT
	PROPOSED 4" PERF TP PIPE DRAIN (UNLESS NOTED)
	INPLACE STORM SEWER AND/OR CULVERT
	RANDOM RIPRAP CL III (UNLESS NOTED)
	EXISTING RIGHT-OF-WAY
	PROPOSED RIGHT-OF-WAY
	TEMPORARY EASEMENT
	CONSTRUCTION LIMITS
	PROPOSED PERMANENT EASEMENT
	PARCEL LINE
	AREA OF ENVIRONMENTAL SENSITIVITY
1	CONNECT INTO EXISTING DRAINAGE STRUCTURE
2	CONNECT TO EXISTING STORM SEWER
3	ADJUST FRAME & RING CASTING

SPECIFIC NOTES:

Ⓐ STRUCTURE TO INCLUDE SUMP AND STRUCTURAL POLLUTION CONTROL DEVICE (INCIDENTAL). SEE DRAINAGE DETAILS.

STRUCTURES ON THIS SHEET

STRUCTURE NO.	PROFILE SHEET NO.	STRUCTURE NO.	PROFILE SHEET NO.
5559	509	5564	509
5560	509	5565	509
5561	509	5569	509
5562	509	5570	509
5563	509		

0 50 100
SCALE FEET

Default

BOLTON & MENK
12224 NICOLLET AVENUE
BURNSVILLE, MINNESOTA 55337
Phone: (952) 890-0509
Email: Burnsville@bolton-menk.com
www.bolton-menk.com

REV.	BY	DATE

I HEREBY CERTIFY THAT THIS PLAN, SPECIFICATION, OR REPORT WAS PREPARED BY ME OR UNDER MY DIRECT SUPERVISION AND THAT I AM A DULY LICENSED PROFESSIONAL ENGINEER UNDER THE LAWS OF THE STATE OF MINNESOTA.

JOHN L. PERKINS
LIC. NO. 56278 DATE 03/14/2025

DESIGNED GMG
DRAWN MMH
CHECKED JLP

S.P. 1002-124, S.P. 1008-113, S.P. 010-596-014, S.P. 010-596-016, S.P. 010-613-009, S.P. 241-020-003, S.P. 241-090-001

TH 5 RECONSTRUCTION

DRAINAGE PLANS

0T4M00197_pen.tbl
H:\CACO\0T4M00197\CAD\ORD\CACO-0T4M00197\plans\Drainage\cd1002124_300drp024.dgn
pdf-B and W.pltcfg
11:19:25 AM
John.Perkins
7/3/2025

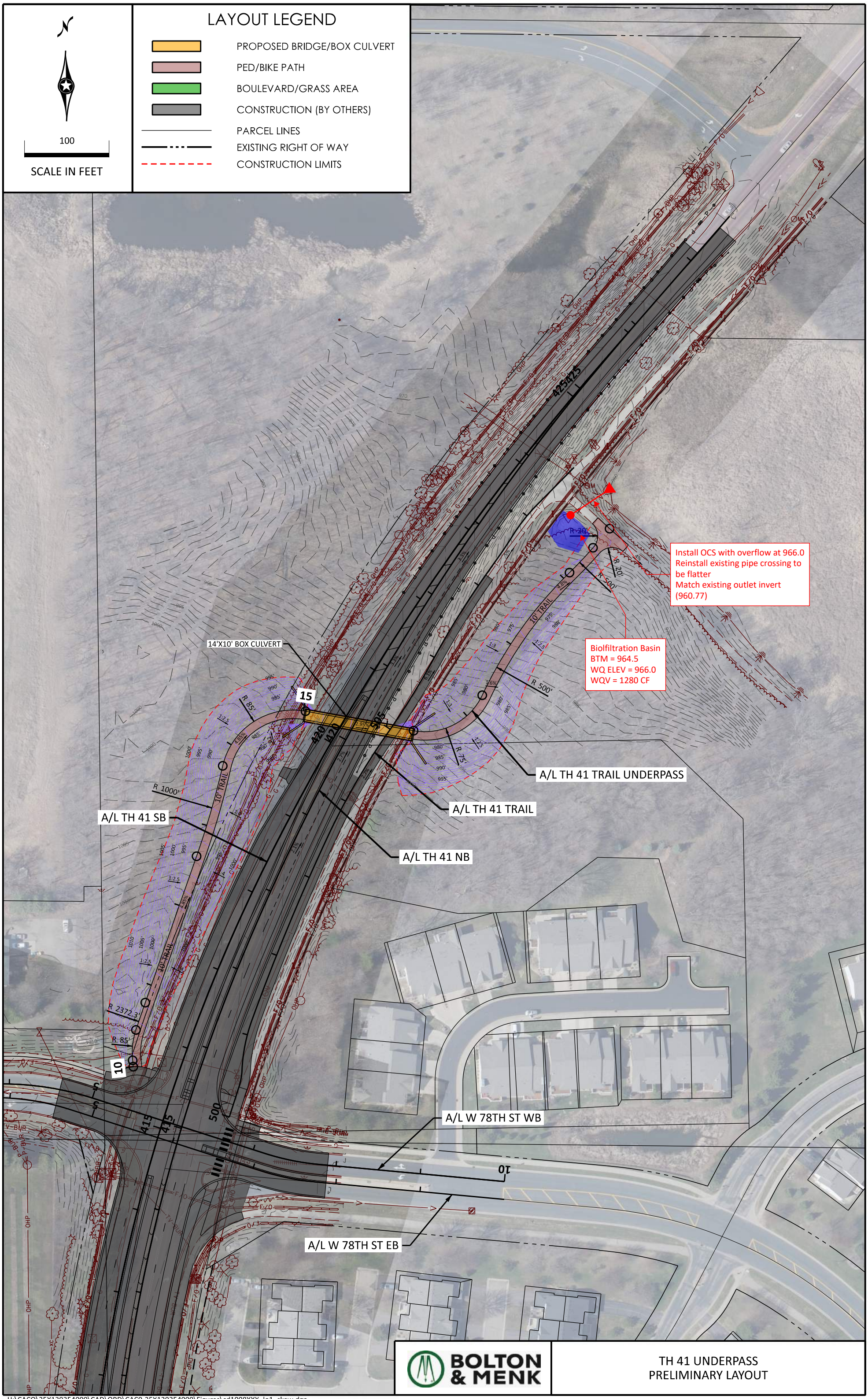

alexanderre pdf-color.pltcfg bmi.tbl 8/6/2025 10:15:55 AM

H:\CACO\25X139354000\CAD\ORD\CAC0-25X139354000\Figures\cd1008XXX_lo1_skew.dgn

Attachment C: Floodplain Exhibits

TH 5 - Floodplain Compensatory Storage			
PROJECT AREA	**WATERBODY**	**FILL**	**CUT**
		(cubic yards)	**(cubic yards)**
TH 5	Lake Minnewashta	1287	1138
TH 5 Bridge		0	154
TOTAL		1287	1293

COMPENSATORY STORAGE CALCULATIONS WORKSHEET
LAKE MINNEWASHTA (100-YR = 946.2)
FILL

STATION	AREA (Square Feet)	AVERAGE AREA (Square Feet)	DISTANCE B/W CROSS SECTIONS (Feet)	STAGE VOLUME (cubic feet)	CUMULATIVE VOLUME (cubic feet)	CUMULATIVE VOLUME (cubic yards)
809+50	0.0					
810+00	0.5	0.2	50.0	8.3	8.3	0.3
810+50	0.0	0.2	50.0	8.3	16.7	0.6
811+00	0.5	0.2	50.0	8.3	25.0	0.9
811+50	0.0	0.2	50.0	8.3	33.3	1.2
812+00	0.0	0.0	50.0	0.0	33.3	1.2
812+50	0.0	0.0	50.0	0.0	33.3	1.2
813+00	0.0	0.0	50.0	0.0	33.3	1.2
813+50	0.0	0.0	50.0	0.0	33.3	1.2
814+00	5.7	1.9	50.0	94.3	127.7	4.7
814+50	13.3	9.2	50.0	460.6	588.3	21.8
815+00	20.4	16.7	50.0	836.2	1424.5	52.8
815+50	36.1	27.9	50.0	1394.0	2818.4	104.4
816+00	29.5	32.7	50.0	1637.2	4455.7	165.0
816+50	14.1	21.3	50.0	1066.6	5522.2	204.5
817+00	18.0	16.0	50.0	800.5	6322.8	234.2
817+50	10.5	14.1	50.0	704.1	7026.9	260.3
818+00	17.9	14.0	50.0	701.8	7728.7	286.2
818+50	30.6	24.0	50.0	1198.4	8927.1	330.6
819+00	29.6	30.1	50.0	1504.9	10432.0	386.4
819+50	31.3	30.4	50.0	1522.3	11954.3	442.8
820+00	16.8	23.7	50.0	1183.9	13138.2	486.6
820+50	17.9	17.3	50.0	867.4	14005.5	518.7
821+00	5.4	11.0	50.0	552.2	14557.7	539.2
821+50	25.3	14.1	50.0	706.5	15264.2	565.3
822+00	27.3	26.3	50.0	1314.7	16578.9	614.0
822+50	28.0	27.6	50.0	1382.5	17961.4	665.2
823+00	38.2	33.0	50.0	1648.4	19609.8	726.3
823+50	9.3	22.1	50.0	1105.8	20715.6	767.2
824+00	20.7	14.6	50.0	731.2	21446.8	794.3
824+50	19.7	20.2	50.0	1009.9	22456.7	831.7
825+00	14.1	16.8	50.0	841.1	23297.8	862.9
825+50	16.8	15.4	50.0	771.5	24069.3	891.5
826+00	1.5	7.8	50.0	388.7	24458.0	905.9
826+50	22.8	10.0	50.0	502.5	24960.5	924.5
827+00	28.9	25.8	50.0	1289.5	26250.0	972.2
827+50	28.9	28.9	50.0	1445.0	27695.0	1025.7
828+00	22.0	25.4	50.0	1268.6	28963.5	1072.7
828+50	1.1	9.3	50.0	467.0	29430.5	1090.0
829+00	12.8	5.9	50.0	294.2	29724.7	1100.9
829+50	21.8	17.1	50.0	855.1	30579.8	1132.6
830+00	22.9	22.3	50.0	1117.4	31697.2	1174.0
830+50	22.7	22.8	50.0	1140.0	32837.2	1216.2
831+00	20.6	21.6	50.0	1082.1	33919.3	1256.3
831+50	1.3	9.8	50.0	490.5	34409.8	1274.4
832+00	0.0	6.9	50.0	343.3	34753.1	1287.2
				TOTAL	**34753.1**	**1287.2**

COMPENSATORY STORAGE CALCULATIONS WORKSHEET
LAKE MINNEWASHTA (100-YR = 946.2)
CUT

STATION	AREA (Square Feet)	AVERAGE AREA (Square Feet)	DISTANCE B/W CROSS SECTIONS (Feet)	STAGE VOLUME (cubic feet)	CUMULATIVE VOLUME (cubic feet)	CUMULATIVE VOLUME (cubic yards)
809+50	0.0					
810+00	0.0	0.0	50.0	0.0	0.0	0.0
810+50	0.0	0.0	50.0	0.0	0.0	0.0
811+00	0.0	0.0	50.0	0.0	0.0	0.0
811+50	0.0	0.0	50.0	0.0	0.0	0.0
812+00	0.0	0.0	50.0	0.0	0.0	0.0
812+50	0.0	0.0	50.0	0.0	0.0	0.0
813+00	0.0	0.0	50.0	0.0	0.0	0.0
813+50	0.0	0.0	50.0	0.0	0.0	0.0
814+00	0.0	0.0	50.0	0.0	0.0	0.0
814+50	0.0	0.0	50.0	0.0	0.0	0.0
815+00	13.4	4.5	50.0	223.3	223.3	8.3
815+50	37.4	24.4	50.0	1219.8	1443.1	53.4
816+00	41.3	39.3	50.0	1966.7	3409.8	126.3
816+50	12.4	25.4	50.0	1272.2	4682.0	173.4
817+00	11.1	11.7	50.0	587.2	5269.2	195.2
817+50	13.8	12.4	50.0	621.3	5890.4	218.2
818+00	19.7	16.7	50.0	833.1	6723.6	249.0
818+50	37.0	27.9	50.0	1395.0	8118.6	300.7
819+00	36.2	36.6	50.0	1830.0	9948.5	368.5
819+50	28.1	32.1	50.0	1603.2	11551.7	427.8
820+00	29.3	28.7	50.0	1434.9	12986.6	481.0
820+50	22.0	25.6	50.0	1278.1	14264.8	528.3
821+00	0.0	7.3	50.0	366.7	14631.5	541.9
821+50	0.0	0.0	50.0	0.0	14631.5	541.9
822+00	0.0	0.0	50.0	0.0	14631.5	541.9
822+50	0.0	0.0	50.0	0.0	14631.5	541.9
823+00	0.0	0.0	50.0	0.0	14631.5	541.9
823+50	7.1	2.4	50.0	118.3	14749.8	546.3
824+00	0.0	2.4	50.0	118.3	14868.1	550.7
824+50	11.6	3.9	50.0	193.3	15061.5	557.8
825+00	22.0	16.5	50.0	826.2	15887.7	588.4
825+50	16.0	18.9	50.0	946.0	16833.7	623.5
826+00	33.6	24.3	50.0	1213.1	18046.8	668.4
826+50	22.8	28.0	50.0	1401.3	19448.1	720.3
827+00	33.8	28.1	50.0	1406.0	20854.2	772.4
827+50	25.5	29.6	50.0	1477.6	22331.8	827.1
828+00	34.6	29.9	50.0	1496.7	23828.5	882.5
828+50	13.8	23.4	50.0	1170.9	24999.4	925.9
829+00	20.8	17.2	50.0	859.0	25858.4	957.7
829+50	11.7	16.0	50.0	801.7	26660.1	987.4
830+00	24.1	17.5	50.0	876.5	27536.6	1019.9
830+50	20.5	22.3	50.0	1113.8	28650.4	1061.1
831+00	17.0	18.7	50.0	936.1	29586.5	1095.8
831+50	6.8	11.5	50.0	575.9	30162.4	1117.1
832+00	9.8	8.3	50.0	412.7	30575.1	1132.4
832+50	0.0	3.3	50.0	163.3	30738.4	1138.5
833+00	0.0	0.0	50.0	0.0	30738.4	1138.5
833+50	0.0	0.0	50.0	0.0	30738.4	1138.5
				TOTAL	**30738.4**	**1138.5**

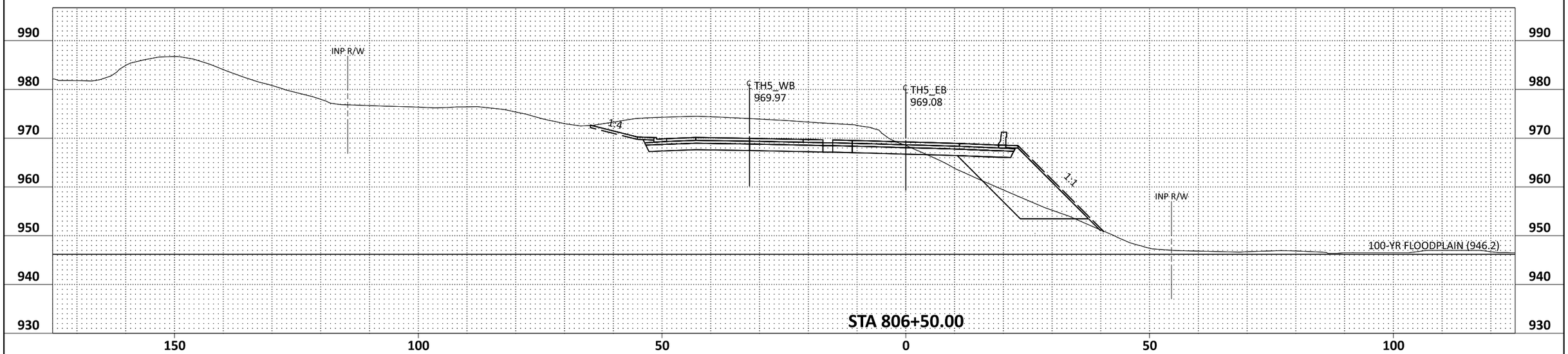

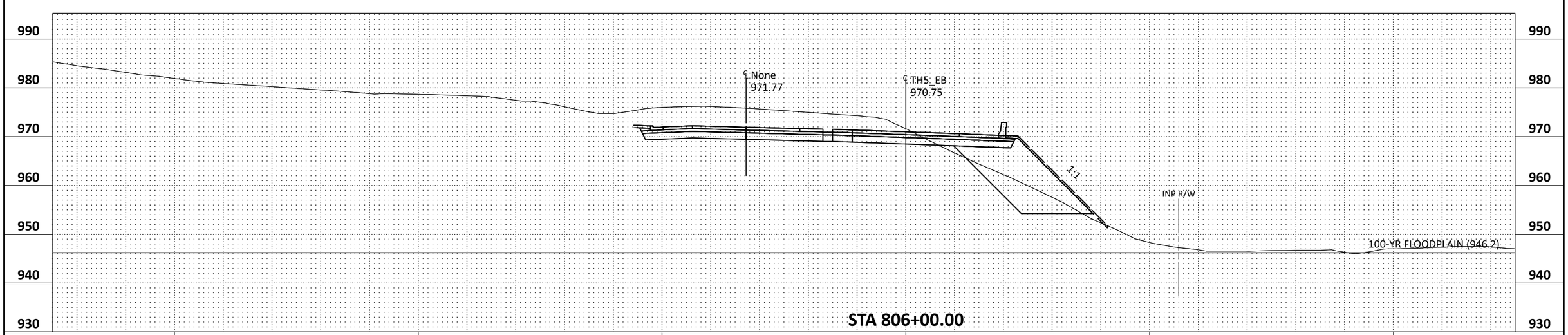

TH5_EB 806+00.00 - 806+50.00

bmi.tbl

pdf-B and W.pltcfg
10:11:28 AM

John.Perkins
8/26/2025

0 5 10
SCALE FEET

TH5_EB - 806+00.00 [Sheet]

H:\CACO\0T4M00197\CAD\ORD\CACO-0T4M00197\temporary (working files)\JLP\cd1002124_xs_TH5_floodplain.dgn

BOLTON & MENK
12224 NICOLLET AVENUE
BURNSVILLE, MINNESOTA 55337
Phone: (952) 890-0509
Email: Burnsville@bolton-menk.com
www.bolton-menk.com

REV.	BY	DATE

I HEREBY CERTIFY THAT THIS PLAN, SPECIFICATION, OR REPORT WAS PREPARED BY ME OR UNDER MY DIRECT SUPERVISION AND THAT I AM A DULY LICENSED PROFESSIONAL ENGINEER UNDER THE LAWS OF THE STATE OF MINNESOTA.

LIC. NO. _____ DATE _____

DESIGNED
DRAWN
CHECKED

S.P. 1002-124
TH 5 RECONSTRUCTION
COMPENSATORY STORAGE EXHIBIT

SHEET 1 OF 17

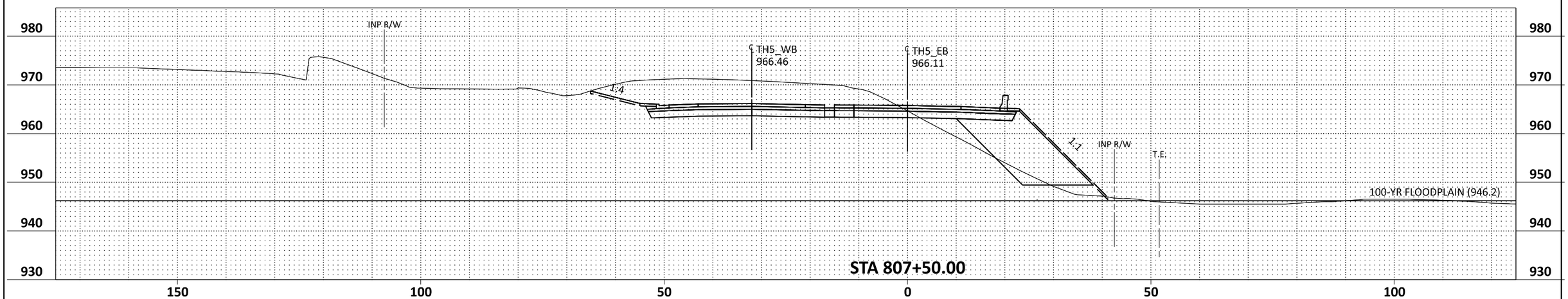

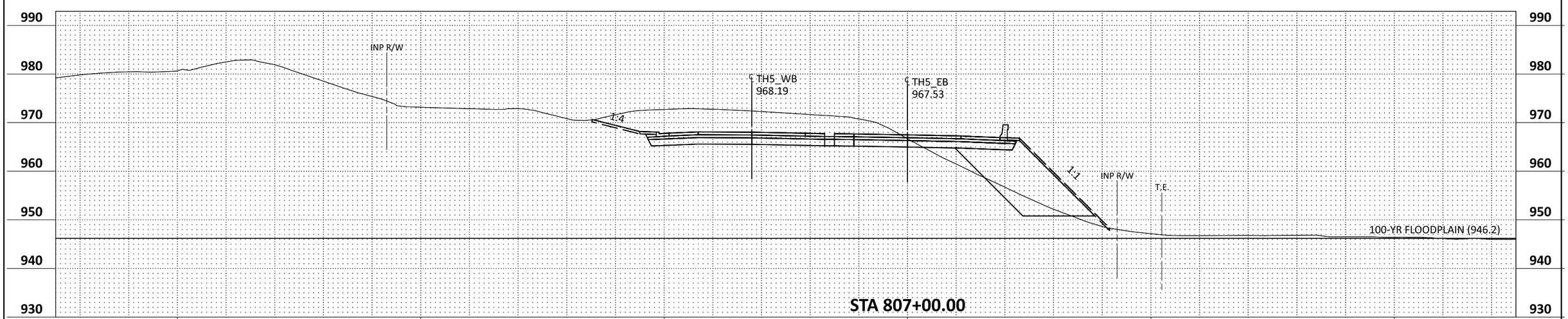

TH5_EB 807+00.00 - 807+50.00

bmi.tbl

pdf-B and W.pltcfg
10:11:29 AM

John.Perkins
8/26/2025

0 5 10
SCALE FEET

TH5_EB - 807+00.00 [Sheet]

H:\CACO\0T4M00197\CAD\ORD\CACO-0T4M00197\temporary (working files)\JLP\cd1002124_xs_TH5_floodplain.dgn

BOLTON & MENK
12224 NICOLLET AVENUE
BURNSVILLE, MINNESOTA 55337
Phone: (952) 890-0509
Email: Burnsville@bolton-menk.com
www.bolton-menk.com

REV.	BY	DATE

I HEREBY CERTIFY THAT THIS PLAN, SPECIFICATION, OR REPORT WAS PREPARED BY ME OR UNDER MY DIRECT SUPERVISION AND THAT I AM A DULY LICENSED PROFESSIONAL ENGINEER UNDER THE LAWS OF THE STATE OF MINNESOTA.

LIC. NO. _____ DATE _____

DESIGNED
DRAWN
CHECKED

S.P. 1002-124
TH 5 RECONSTRUCTION
COMPENSATORY STORAGE EXHIBIT

SHEET 2 OF 17

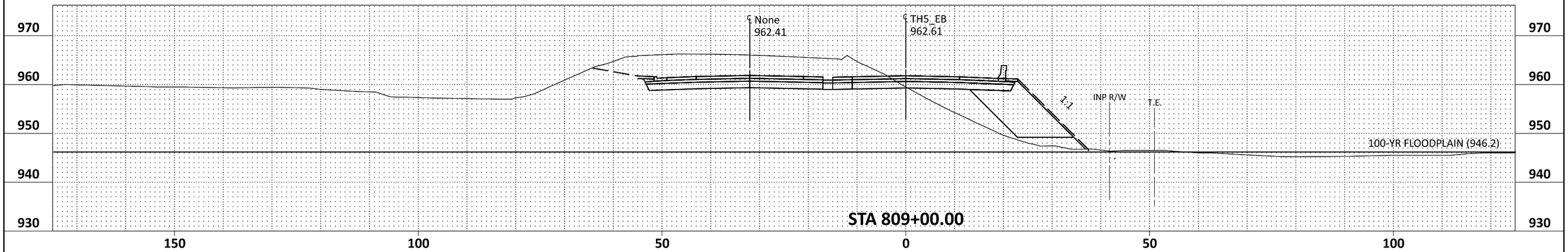

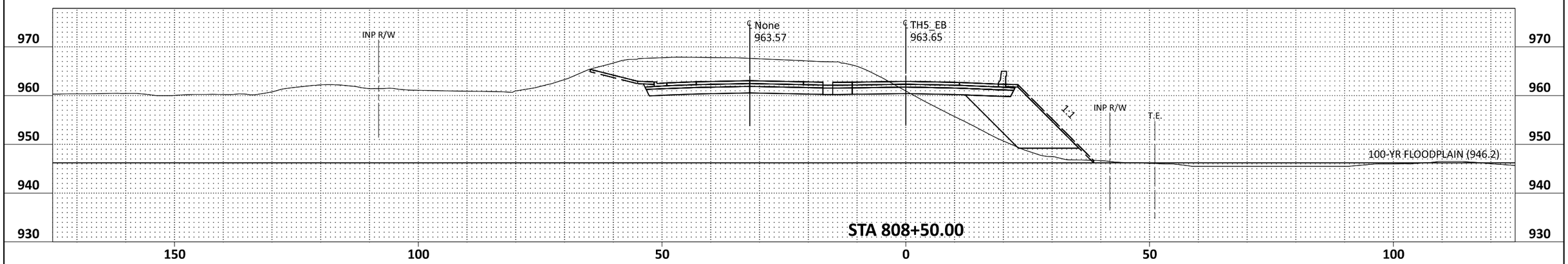

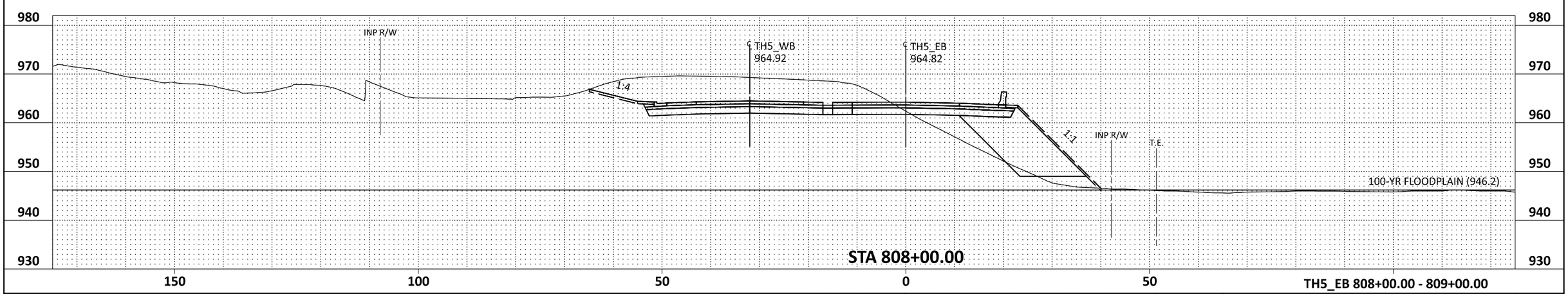

TH5_EB 808+00.00 - 809+00.00

bmi.tbl

pdf-B and W.pltcfg
10:11:31 AM

John.Perkins
8/26/2025

0 5 10
SCALE FEET

TH5_EB - 808+00.00 [Sheet]

H:\CACO\0T4M00197\CAD\ORD\CACO-0T4M00197\temporary (working files)\JLP\cd1002124_xs_TH5_floodplain.dgn

BOLTON & MENK
12224 NICOLLET AVENUE
BURNSVILLE, MINNESOTA 55337
Phone: (952) 890-0509
Email: Burnsville@bolton-menk.com
www.bolton-menk.com

REV.	BY	DATE

I HEREBY CERTIFY THAT THIS PLAN, SPECIFICATION, OR REPORT WAS PREPARED BY ME OR UNDER MY DIRECT SUPERVISION AND THAT I AM A DULY LICENSED PROFESSIONAL ENGINEER UNDER THE LAWS OF THE STATE OF MINNESOTA.

LIC. NO. _____ DATE _____

DESIGNED
DRAWN
CHECKED

S.P. 1002-124
TH 5 RECONSTRUCTION
COMPENSATORY STORAGE EXHIBIT

SHEET 3 OF 17

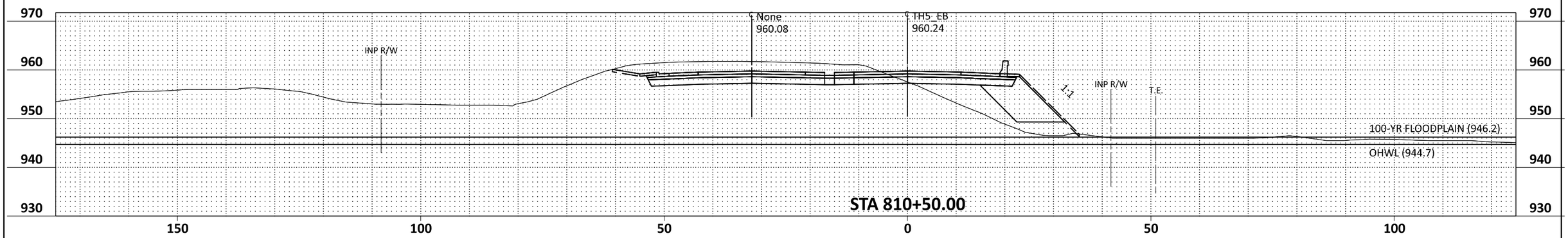

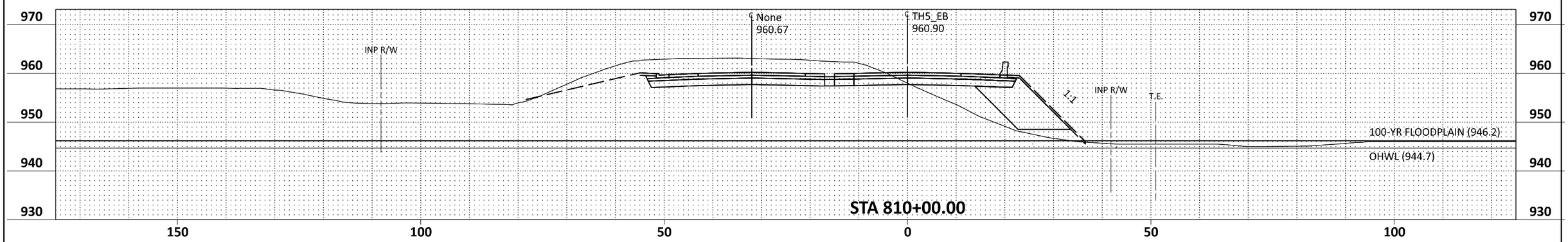

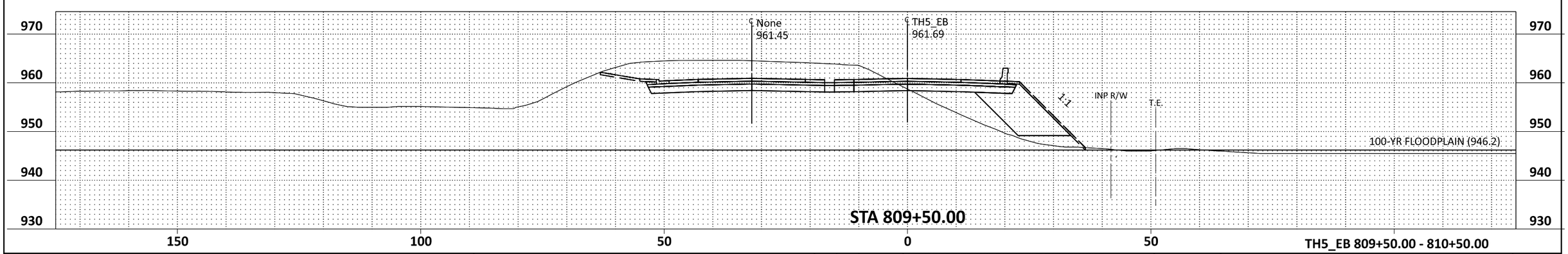

TH5_EB 809+50.00 - 810+50.00

bmi.tbl

pdf-B and W.pltcfg
10:11:33 AM

John.Perkins
8/26/2025

TH5_EB - 809+50.00 [Sheet]

REV.	BY	DATE

I HEREBY CERTIFY THAT THIS PLAN, SPECIFICATION, OR REPORT WAS PREPARED BY ME OR UNDER MY DIRECT SUPERVISION AND THAT I AM A DULY LICENSED PROFESSIONAL ENGINEER UNDER THE LAWS OF THE STATE OF MINNESOTA.

LIC. NO. _____ DATE _____

DESIGNED
DRAWN
CHECKED

TH 5 RECONSTRUCTION

COMPENSATORY STORAGE EXHIBIT

SHEET 4 OF 17

H:\CACO\0T4M00197\CAD\ORD\CACO-0T4M00197\temporary (working files)\JLP\cd1002124_xs_TH5_floodplain.dgn

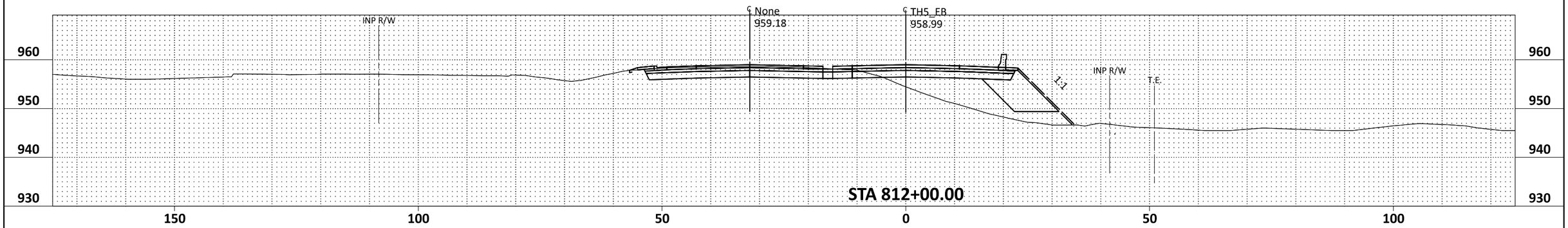

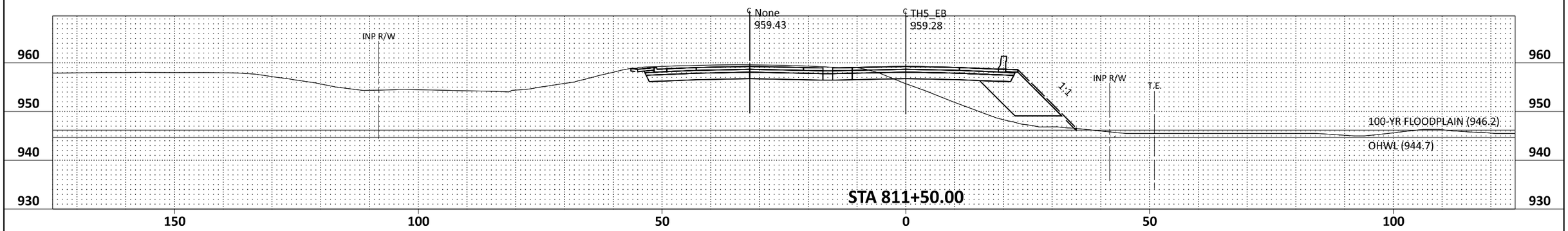

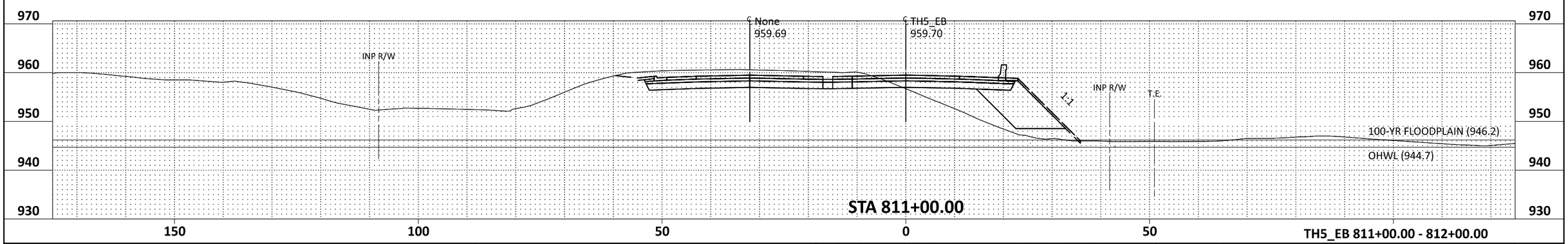

TH5_EB 811+00.00 - 812+00.00

REV.	BY	DATE

I HEREBY CERTIFY THAT THIS PLAN, SPECIFICATION, OR REPORT WAS PREPARED BY ME OR UNDER MY DIRECT SUPERVISION AND THAT I AM A DULY LICENSED PROFESSIONAL ENGINEER UNDER THE LAWS OF THE STATE OF MINNESOTA.

LIC. NO. _____ DATE _____

DESIGNED
DRAWN
CHECKED

*PROJECT NAME

COMPENSATORY STORAGE EXHIBIT

SHEET 5 OF 17

TH5_EB - 811+00.00 [Sheet]

H:\CACO\0T4M00197\CAD\ORD\CACO-0T4M00197\temporary (working files)\JLP\cd1002124_xs_TH5_floodplain.dgn

bmi.tbl

pdf-B and W.pltcfg
10:11:35 AM

John.Perkins
8/26/2025

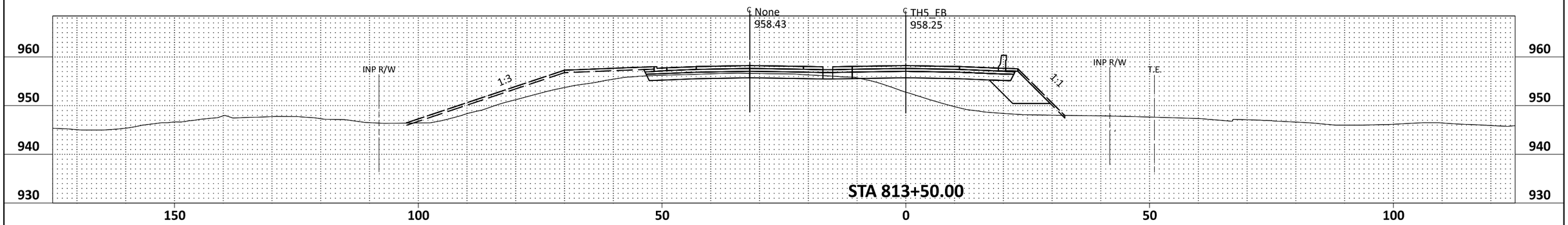

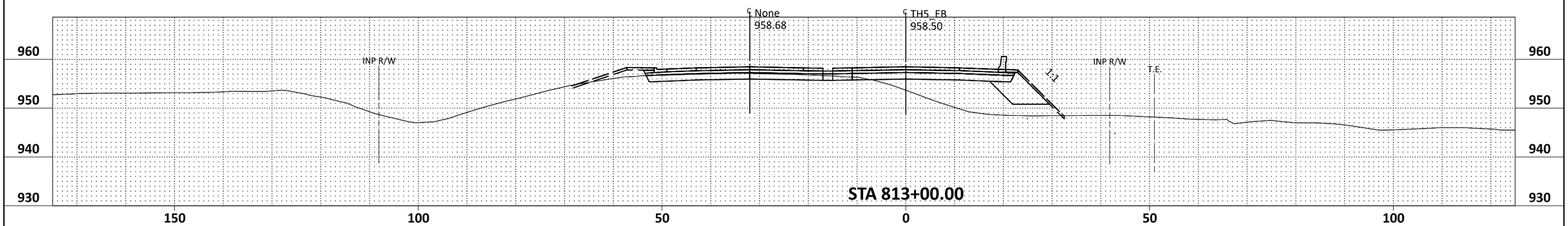

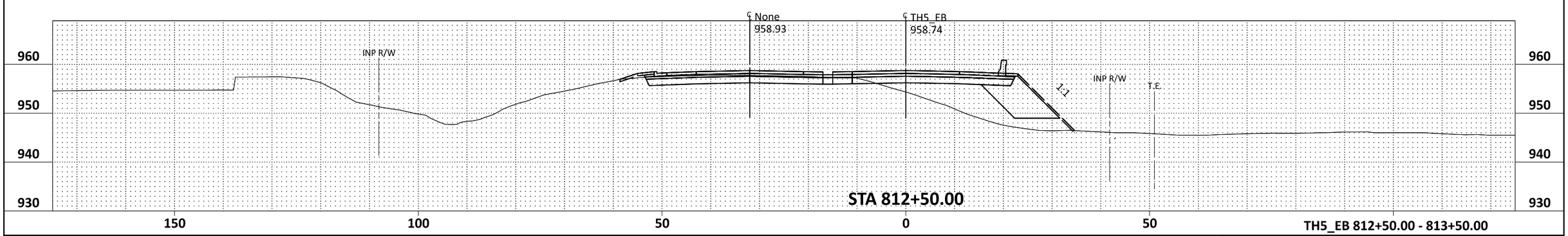

TH5_EB 812+50.00 - 813+50.00

bmi.tbl

pdf-B and W.pltcfg
10:11:37 AM

John.Perkins
8/26/2025

TH5_EB - 812+50.00 [Sheet]

REV.	BY	DATE

I HEREBY CERTIFY THAT THIS PLAN, SPECIFICATION, OR REPORT WAS PREPARED BY ME OR UNDER MY DIRECT SUPERVISION AND THAT I AM A DULY LICENSED PROFESSIONAL ENGINEER UNDER THE LAWS OF THE STATE OF MINNESOTA.

LIC. NO. _____ DATE _____

DESIGNED
DRAWN
CHECKED

TH 5 RECONSTRUCTION

COMPENSATORY STORAGE EXHIBIT

SHEET 6 OF 17

H:\CACO\0T4M00197\CAD\ORD\CACO-0T4M00197\temporary (working files)\JLP\cd1002124_xs_TH5_floodplain.dgn

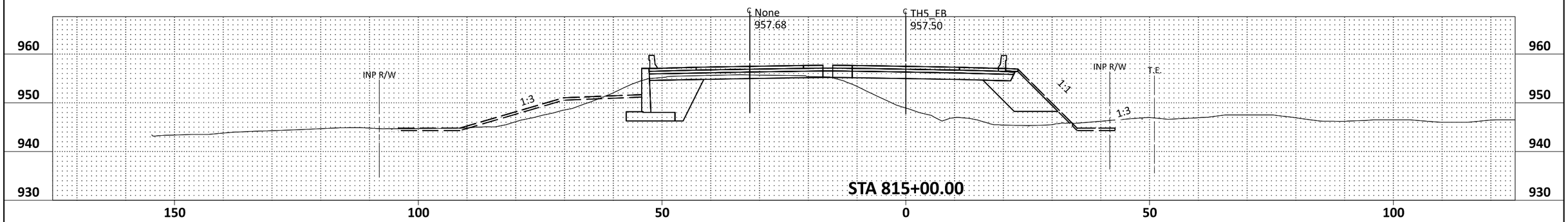

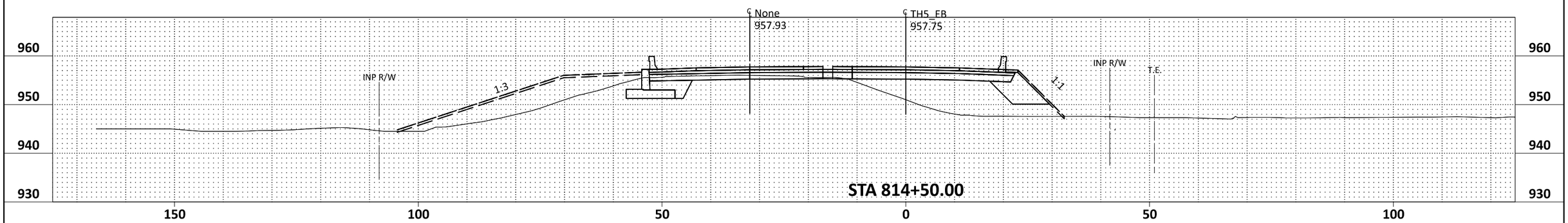

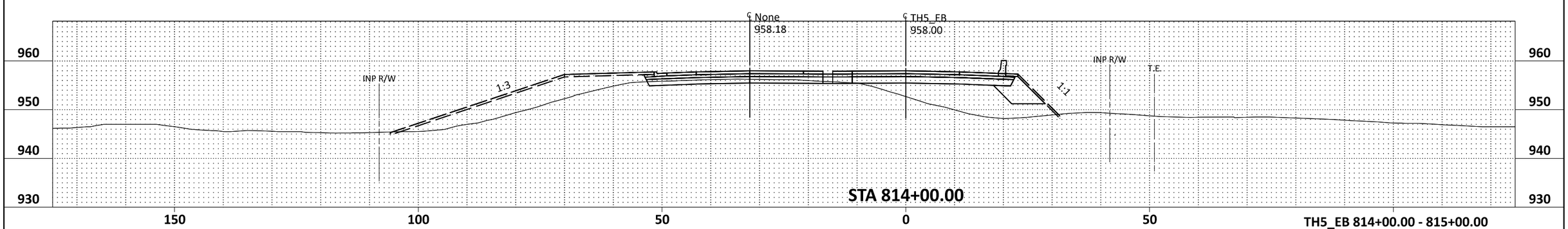

TH5_EB 814+00.00 - 815+00.00

bmi.tbl

pdf-B and W.pltcfg
10:11:39 AM

John.Perkins
8/26/2025

TH5_EB - 814+00.00 [Sheet]

H:\CACO\0T4M00197\CAD\ORD\CACO-0T4M00197\temporary (working files)\JLP\cd1002124_xs_TH5_floodplain.dgn

REV.	BY	DATE

I HEREBY CERTIFY THAT THIS PLAN, SPECIFICATION, OR REPORT WAS PREPARED BY ME OR UNDER MY DIRECT SUPERVISION AND THAT I AM A DULY LICENSED PROFESSIONAL ENGINEER UNDER THE LAWS OF THE STATE OF MINNESOTA.

LIC. NO. _____ DATE _____

DESIGNED
DRAWN
CHECKED

TH 5 RECONSTRUCTION

COMPENSATORY STORAGE EXHIBIT

SHEET 7 OF 17

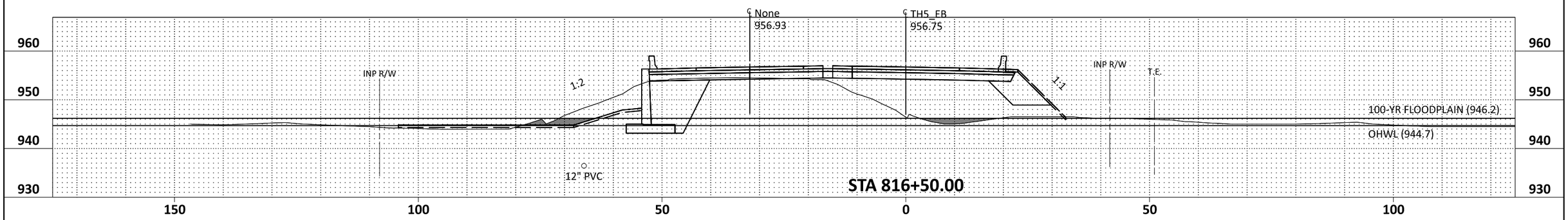

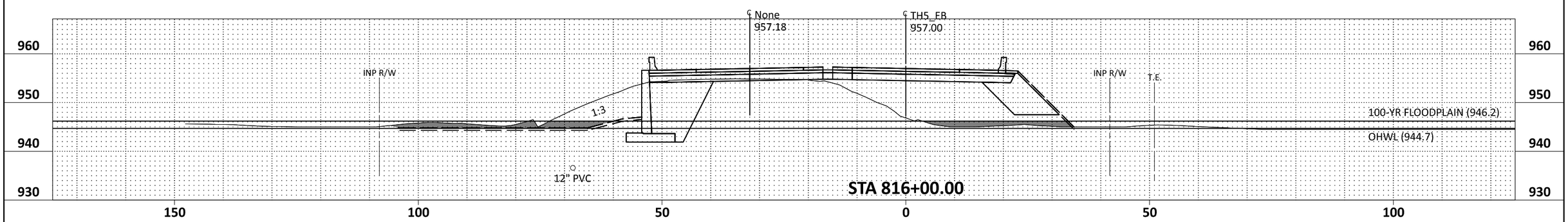

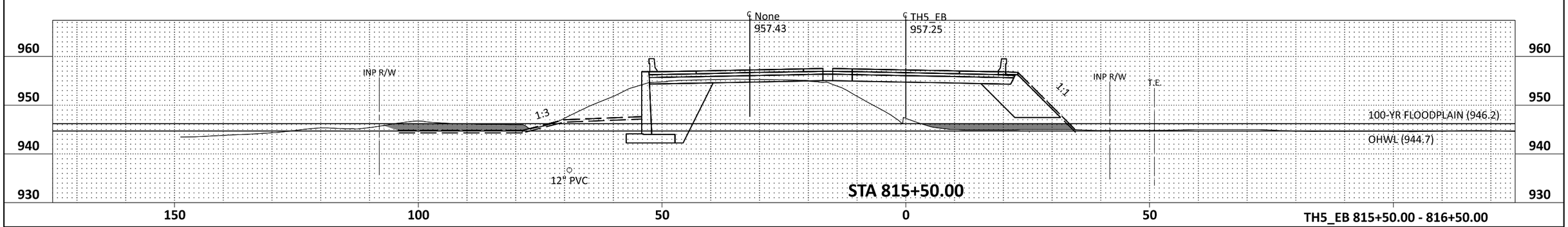

TH5_EB 815+50.00 - 816+50.00

bmi.tbl

pdf-B and W.pltcfg
10:11:41 AM

John.Perkins
8/26/2025

0 5 10
SCALE FEET

TH5_EB - 815+50.00 [Sheet]

H:\CACO\0T4M00197\CAD\ORD\CACO-0T4M00197\temporary (working files)\JLP\cd1002124_xs_TH5_floodplain.dgn

BOLTON & MENK
12224 NICOLLET AVENUE
BURNSVILLE, MINNESOTA 55337
Phone: (952) 890-0509
Email: Burnsville@bolton-menk.com
www.bolton-menk.com

REV.	BY	DATE

I HEREBY CERTIFY THAT THIS PLAN, SPECIFICATION, OR REPORT WAS PREPARED BY ME OR UNDER MY DIRECT SUPERVISION AND THAT I AM A DULY LICENSED PROFESSIONAL ENGINEER UNDER THE LAWS OF THE STATE OF MINNESOTA.

LIC. NO. _____ DATE _____

DESIGNED
DRAWN
CHECKED

S.P. 1002-124
TH 5 RECONSTRUCTION
COMPENSATORY STORAGE EXHIBIT

SHEET 8 OF 17

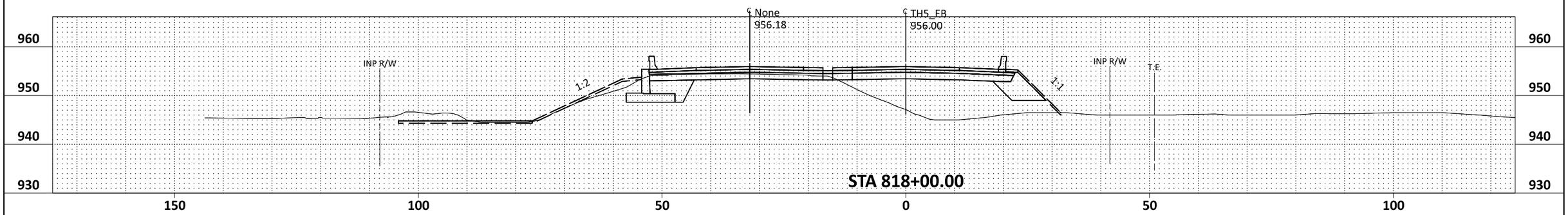

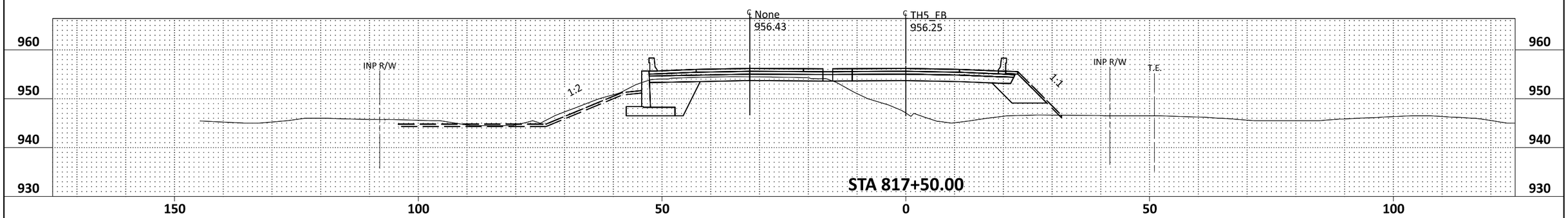

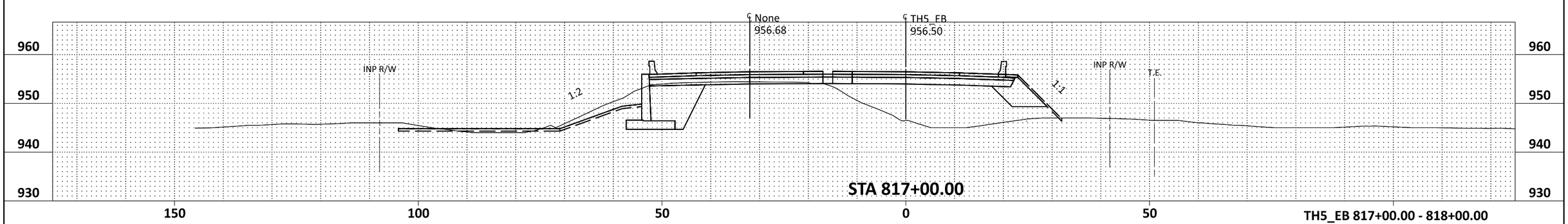

TH5_EB 817+00.00 - 818+00.00

bmi.tbl

pdf-B and W.pltcfg
10:11:44 AM

John.Perkins
8/26/2025

TH5_EB - 817+00.00 [Sheet]

REV.	BY	DATE

I HEREBY CERTIFY THAT THIS PLAN, SPECIFICATION, OR REPORT WAS PREPARED BY ME OR UNDER MY DIRECT SUPERVISION AND THAT I AM A DULY LICENSED PROFESSIONAL ENGINEER UNDER THE LAWS OF THE STATE OF MINNESOTA.

LIC. NO. _____ DATE _____

DESIGNED
DRAWN
CHECKED

TH 5 RECONSTRUCTION

COMPENSATORY STORAGE EXHIBIT

SHEET 9 OF 17

H:\CACO\0T4M00197\CAD\ORD\CACO-0T4M00197\temporary (working files)\JLP\cd1002124_xs_TH5_floodplain.dgn

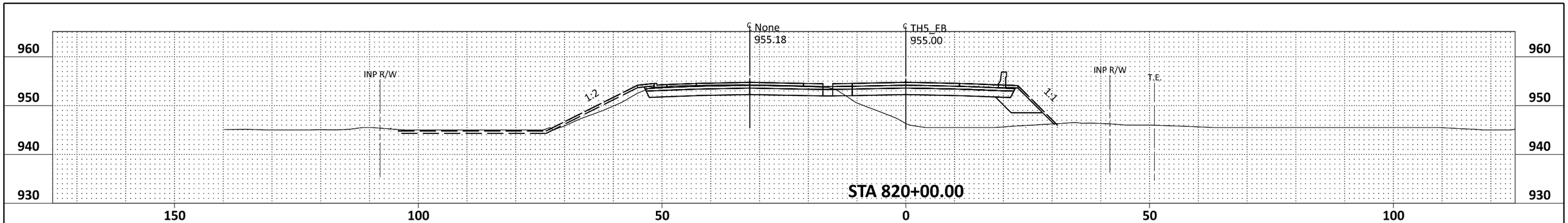

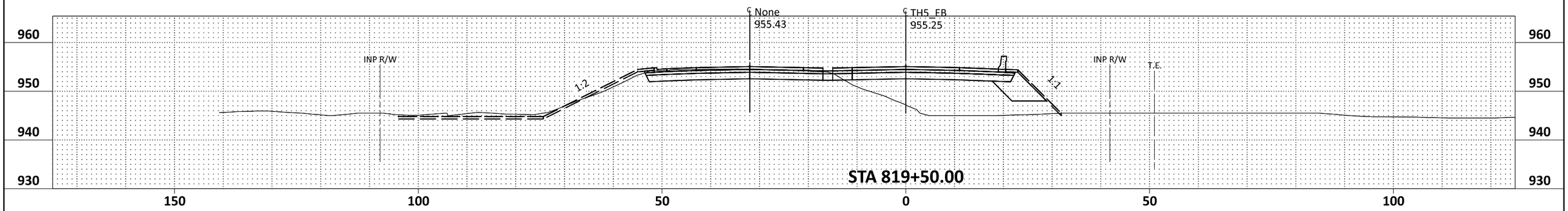

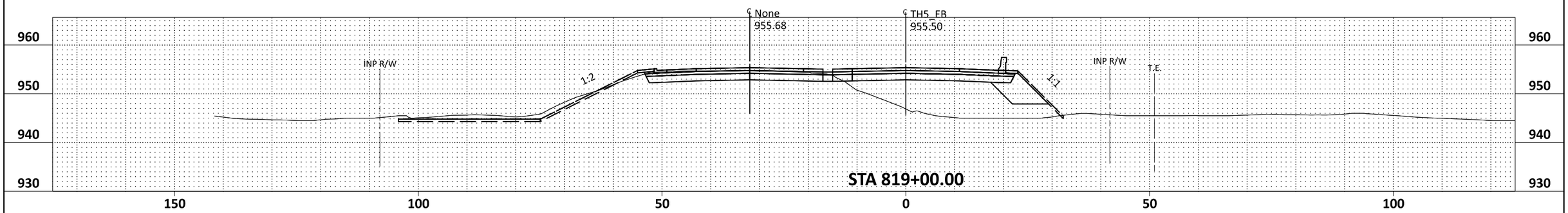

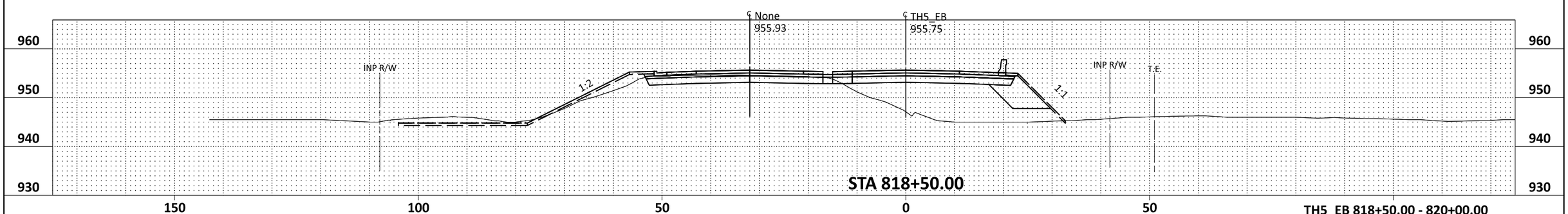

TH5_EB 818+50.00 - 820+00.00

bmi.tbl

pdf-B and W.pltcfg
10:11:46 AM

John.Perkins
8/26/2025

TH5_EB - 818+50.00 [Sheet]

REV.	BY	DATE

I HEREBY CERTIFY THAT THIS PLAN, SPECIFICATION, OR REPORT WAS PREPARED BY ME OR UNDER MY DIRECT SUPERVISION AND THAT I AM A DULY LICENSED PROFESSIONAL ENGINEER UNDER THE LAWS OF THE STATE OF MINNESOTA.

LIC. NO. _____ DATE _____

DESIGNED
DRAWN
CHECKED

TH 5 RECONSTRUCTION

COMPENSATORY STORAGE EXHIBIT

SHEET 10 OF 17

H:\CACO\0T4M00197\CAD\ORD\CACO-0T4M00197\temporary (working files)\JLP\cd1002124_xs_TH5_floodplain.dgn

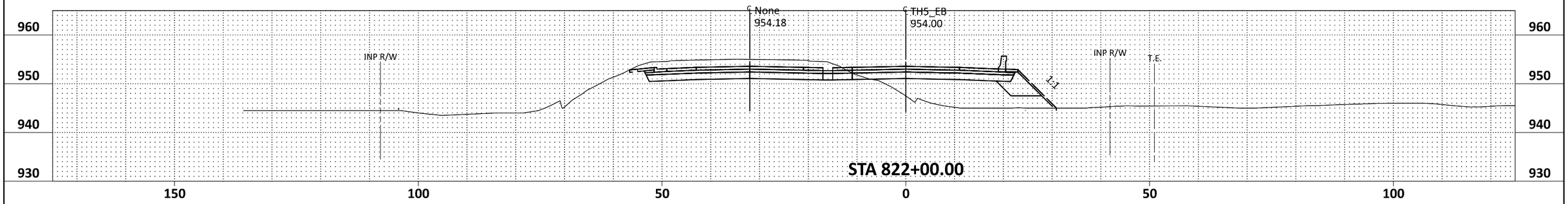

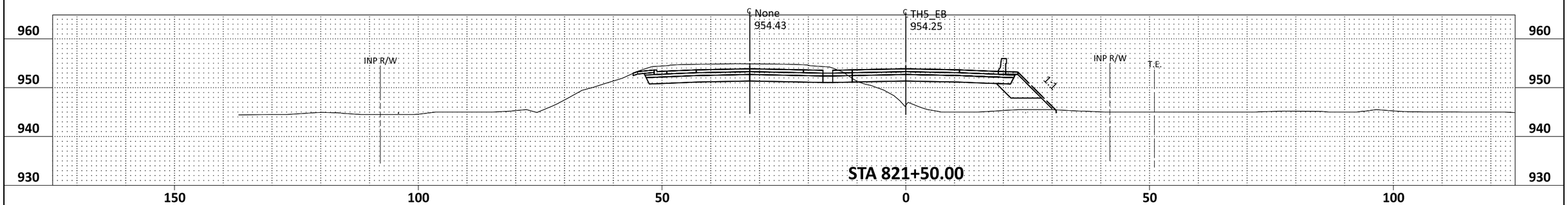

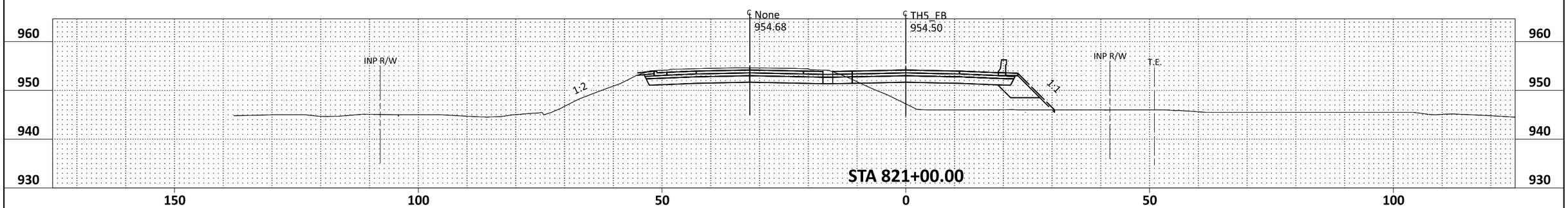

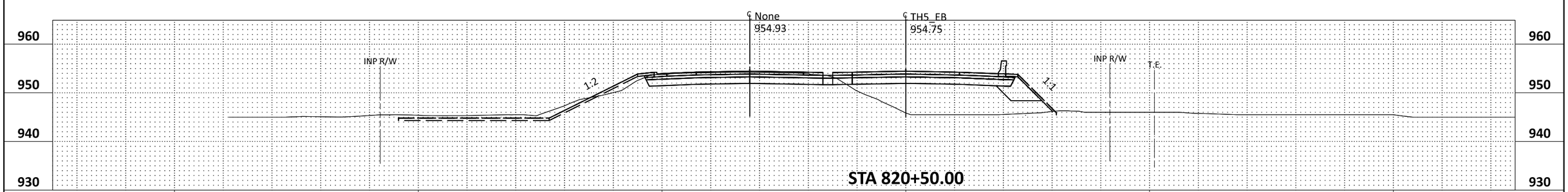

TH5_EB 820+50.00 - 822+00.00

bmi.tbl

pdf-B and W.pltcfg
10:11:49 AM

John.Perkins
8/26/2025

TH5_EB - 820+50.00 [Sheet]

H:\CACO\0T4M00197\CAD\ORD\CACO-0T4M00197\temporary (working files)\JLP\cd1002124_xs_TH5_floodplain.dgn

REV.	BY	DATE

I HEREBY CERTIFY THAT THIS PLAN, SPECIFICATION, OR REPORT WAS PREPARED BY ME OR UNDER MY DIRECT SUPERVISION AND THAT I AM A DULY LICENSED PROFESSIONAL ENGINEER UNDER THE LAWS OF THE STATE OF MINNESOTA.

LIC. NO. _____ DATE _____

DESIGNED
DRAWN
CHECKED

TH 5 RECONSTRUCTION

COMPENSATORY STORAGE EXHIBIT

SHEET 11 OF 17

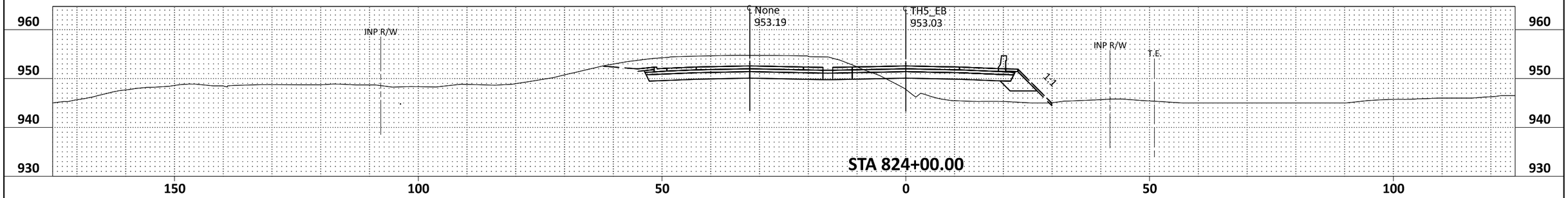

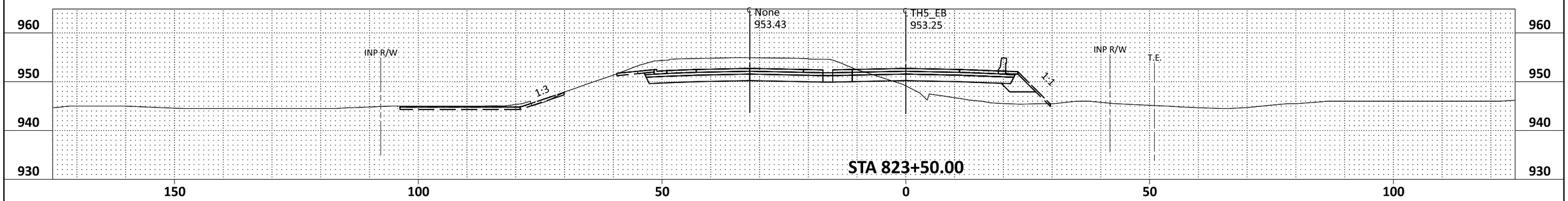

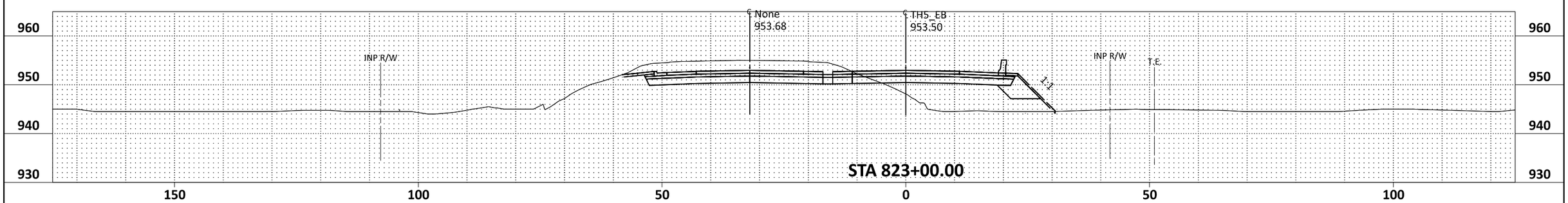

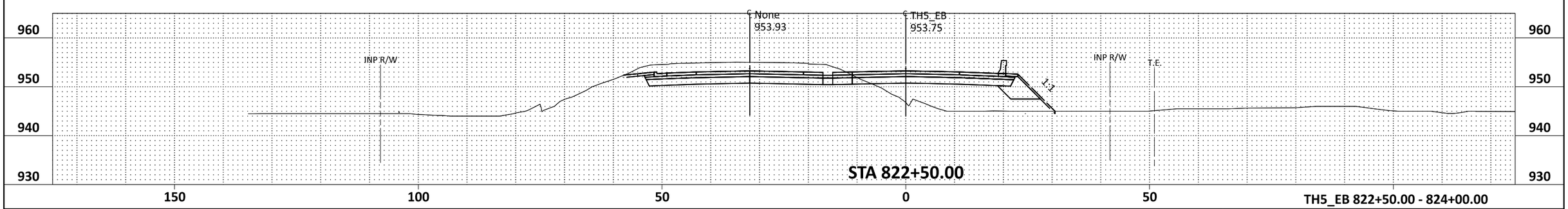

TH5_EB 822+50.00 - 824+00.00

bmi.tbl

pdf-B and W.pltcfg
10:11:52 AM

John.Perkins
8/26/2025

TH5_EB - 822+50.00 [Sheet]

H:\CACO\0T4M00197\CAD\ORD\CACO-0T4M00197\temporary (working files)\JLP\cd1002124_xs_TH5_floodplain.dgn

REV.	BY	DATE

I HEREBY CERTIFY THAT THIS PLAN, SPECIFICATION, OR REPORT WAS PREPARED BY ME OR UNDER MY DIRECT SUPERVISION AND THAT I AM A DULY LICENSED PROFESSIONAL ENGINEER UNDER THE LAWS OF THE STATE OF MINNESOTA.

LIC. NO. _____ DATE _____

DESIGNED
DRAWN
CHECKED

TH 5 RECONSTRUCTION

COMPENSATORY STORAGE EXHIBIT

SHEET 12 OF 17

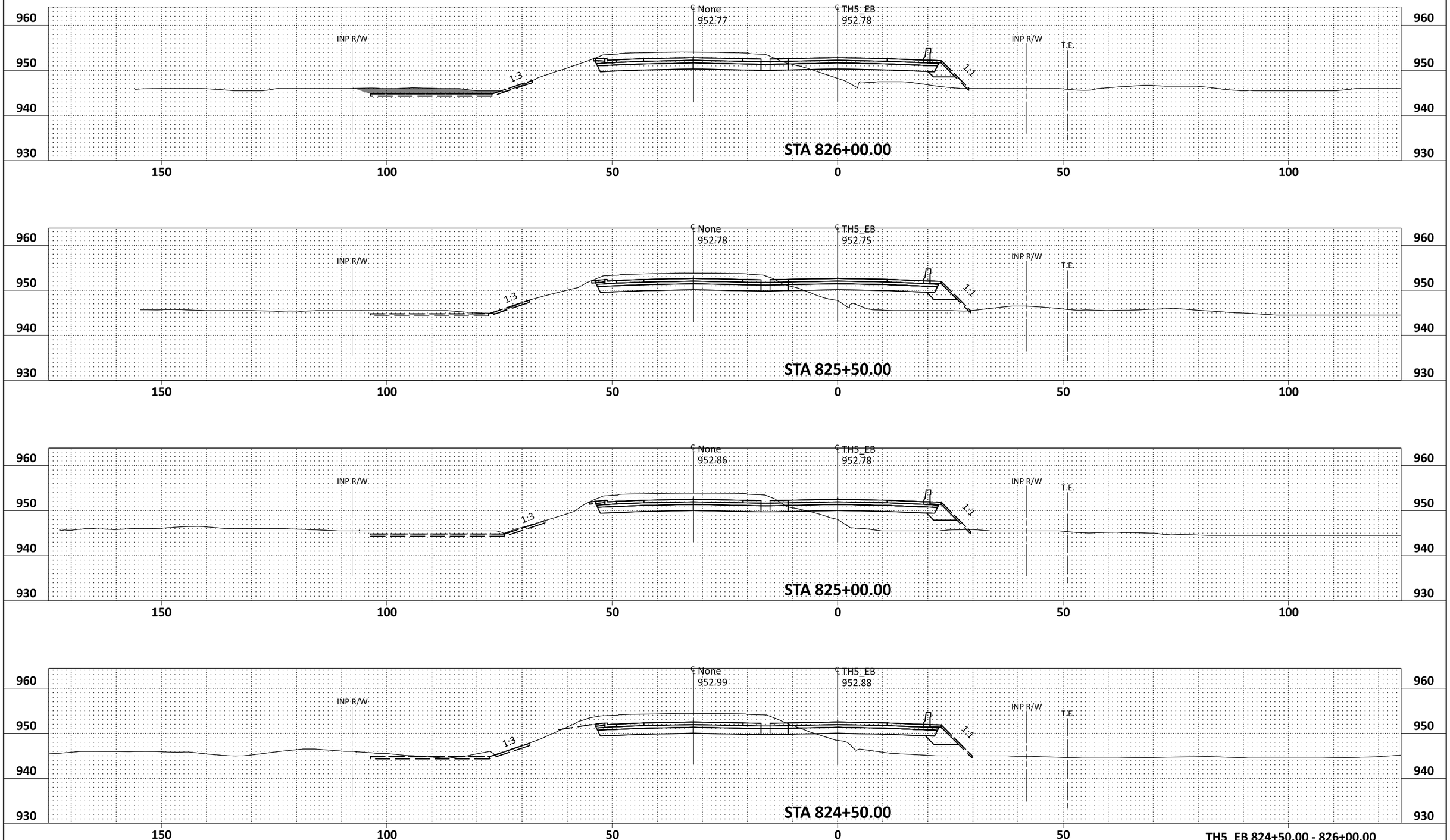

bmi.tbl

pdf-B and W.pltcfg
10:11:54 AM

John.Perkins
8/26/2025

TH5_EB - 824+50.00 [Sheet]

H:\CACO\0T4M00197\CAD\ORD\CACO-0T4M00197\temporary (working files)\JLP\cd1002124_xs_TH5_floodplain.dgn

REV.	BY	DATE

I HEREBY CERTIFY THAT THIS PLAN, SPECIFICATION, OR REPORT WAS PREPARED BY ME OR UNDER MY DIRECT SUPERVISION AND THAT I AM A DULY LICENSED PROFESSIONAL ENGINEER UNDER THE LAWS OF THE STATE OF MINNESOTA.

LIC. NO. _____ DATE _____

DESIGNED

DRAWN

CHECKED

TH 5 RECONSTRUCTION

COMPENSATORY STORAGE EXHIBIT

SHEET 13 OF 17

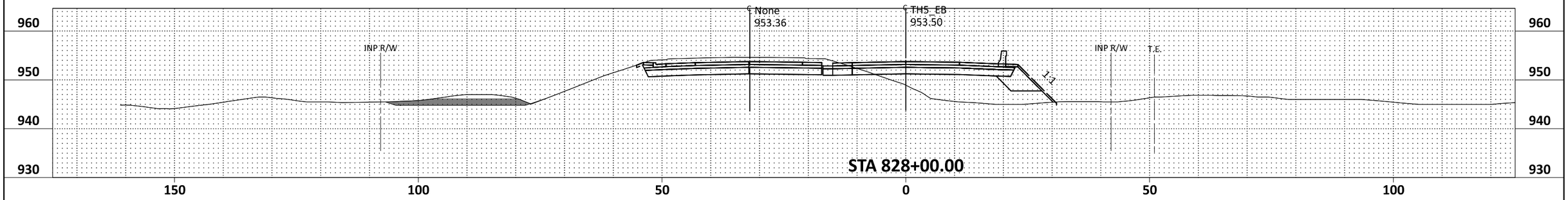

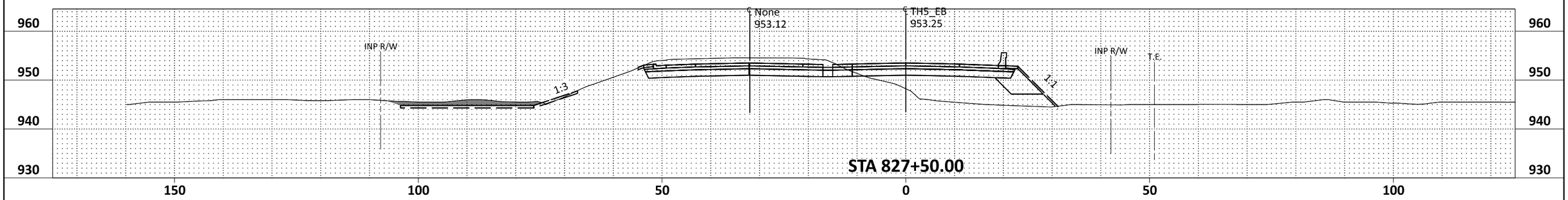

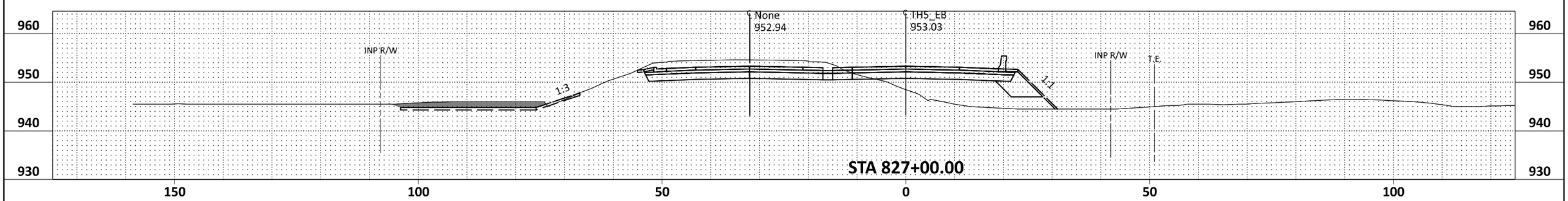

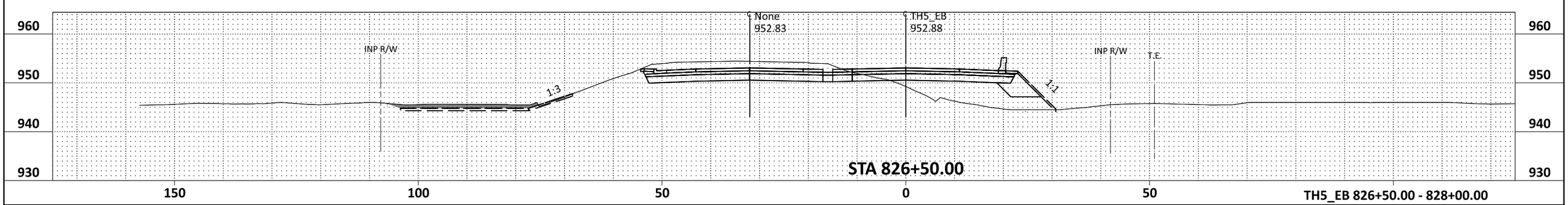

TH5_EB 826+50.00 - 828+00.00

bmi.tbl

pdf-B and W.pltcfg
10:11:57 AM

John.Perkins
8/26/2025

TH5_EB - 826+50.00 [Sheet]

REV.	BY	DATE

I HEREBY CERTIFY THAT THIS PLAN, SPECIFICATION, OR REPORT WAS PREPARED BY ME OR UNDER MY DIRECT SUPERVISION AND THAT I AM A DULY LICENSED PROFESSIONAL ENGINEER UNDER THE LAWS OF THE STATE OF MINNESOTA.

LIC. NO. _____ DATE _____

DESIGNED
DRAWN
CHECKED

TH 5 RECONSTRUCTION

COMPENSATORY STORAGE EXHIBIT

SHEET 14 OF 17

H:\CACO\0T4M00197\CAD\ORD\CACO-0T4M00197\temporary (working files)\JLP\cd1002124_xs_TH5_floodplain.dgn

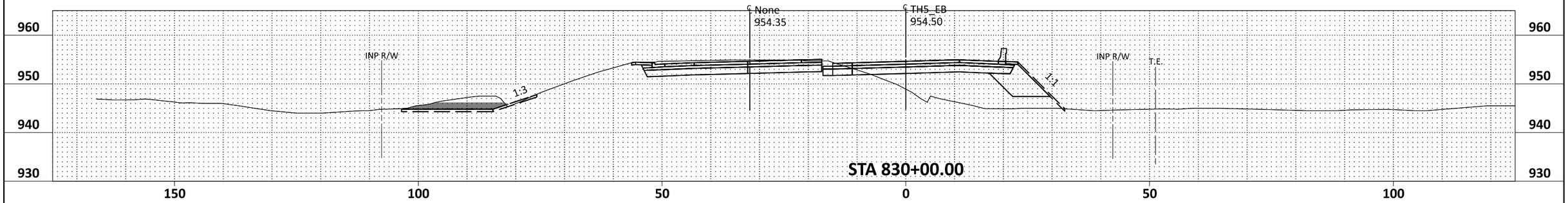

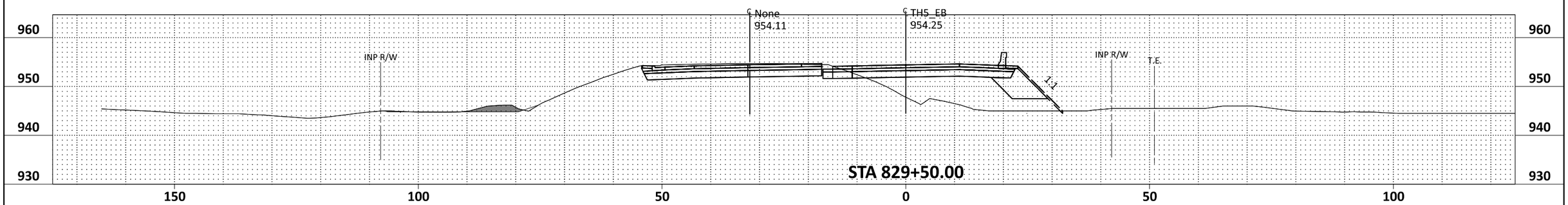

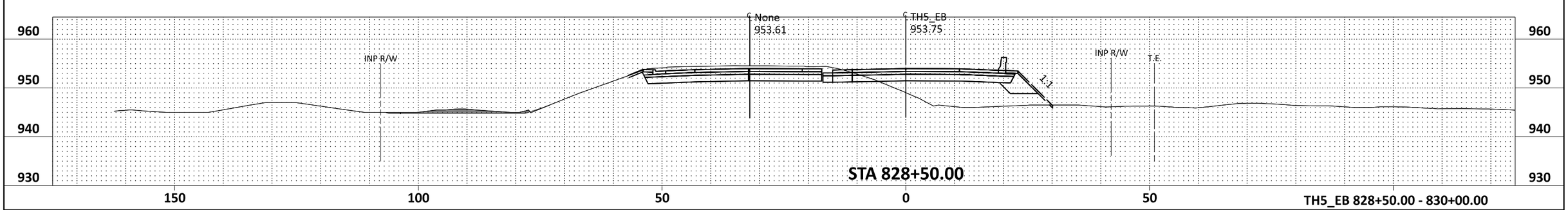

TH5_EB 828+50.00 - 830+00.00

bmi.tbl

pdf-B and W.pltcfg
10:12:00 AM

John.Perkins
8/26/2025

TH5_EB - 828+50.00 [Sheet]

REV.	BY	DATE

I HEREBY CERTIFY THAT THIS PLAN, SPECIFICATION, OR REPORT WAS PREPARED BY ME OR UNDER MY DIRECT SUPERVISION AND THAT I AM A DULY LICENSED PROFESSIONAL ENGINEER UNDER THE LAWS OF THE STATE OF MINNESOTA.

LIC. NO. _____ DATE _____

DESIGNED
DRAWN
CHECKED

TH 5 RECONSTRUCTION

COMPENSATORY STORAGE EXHIBIT

SHEET 15 OF 17

H:\CACO\0T4M00197\CAD\ORD\CACO-0T4M00197\temporary (working files)\JLP\cd1002124_xs_TH5_floodplain.dgn

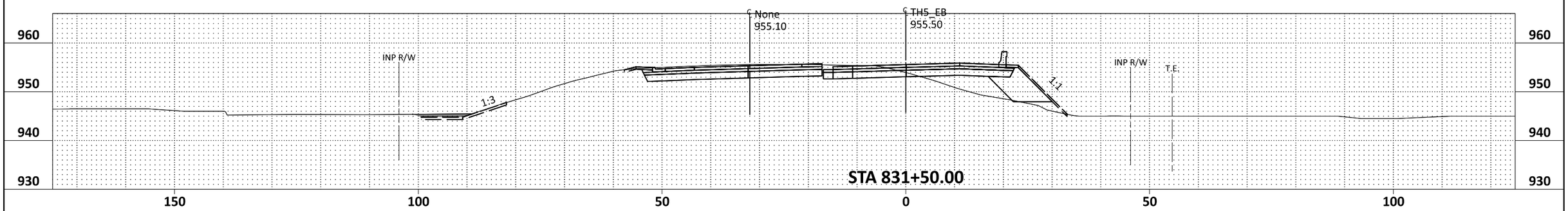

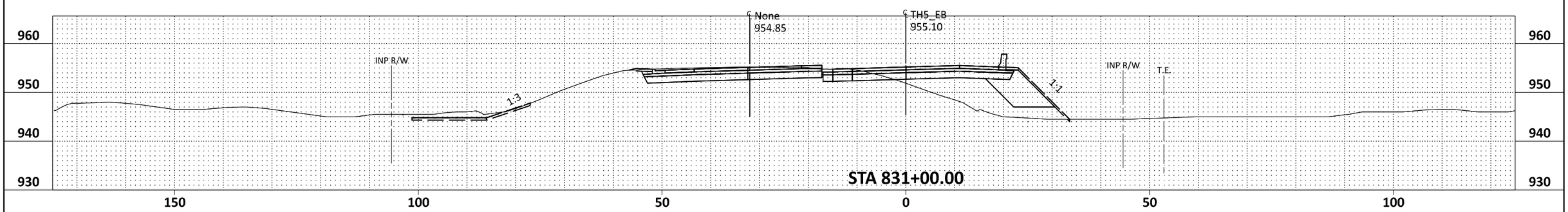

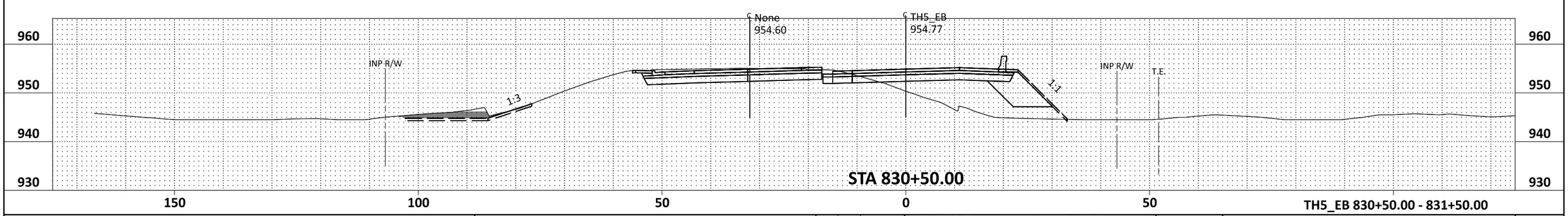

TH5_EB 830+50.00 - 831+50.00

bmi.tbl

pdf-B and W.pltcfg
10:12:02 AM

John.Perkins
8/26/2025

TH5_EB - 830+50.00 [Sheet]

REV.	BY	DATE

I HEREBY CERTIFY THAT THIS PLAN, SPECIFICATION, OR REPORT WAS PREPARED BY ME OR UNDER MY DIRECT SUPERVISION AND THAT I AM A DULY LICENSED PROFESSIONAL ENGINEER UNDER THE LAWS OF THE STATE OF MINNESOTA.

LIC. NO. _____ DATE _____

DESIGNED
DRAWN
CHECKED

TH 5 RECONSTRUCTION

COMPENSATORY STORAGE EXHIBIT

SHEET 16 OF 17

H:\CACO\0T4M00197\CAD\ORD\CACO-0T4M00197\temporary (working files)\JLP\cd1002124_xs_TH5_floodplain.dgn

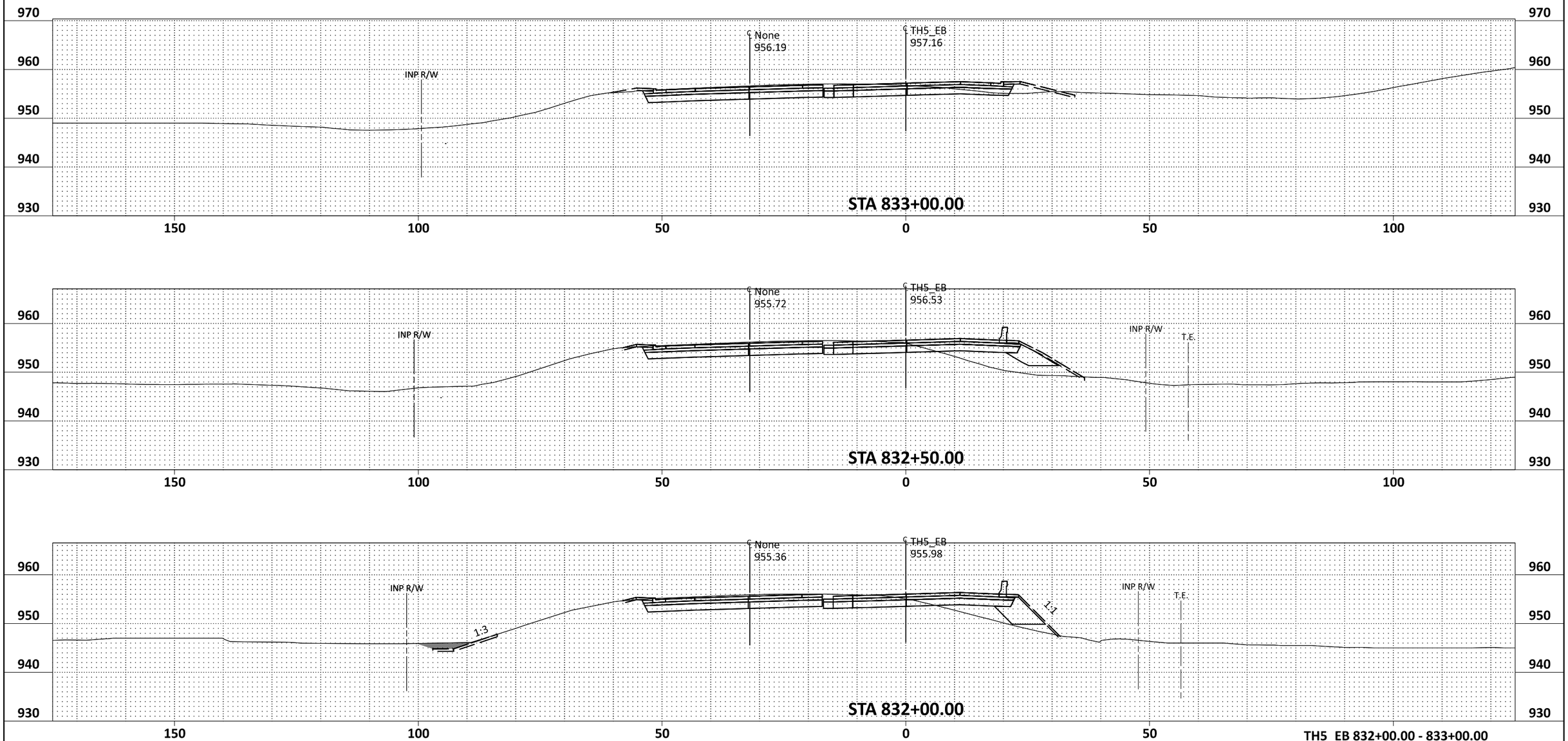

bmi.tbl

pdf-B and W.pltcfg
10:12:04 AM

John.Perkins
8/26/2025

TH5_EB - 832+00.00 [Sheet]

H:\CACO\0T4M00197\CAD\ORD\CACO-0T4M00197\temporary (working files)\JLP\cd1002124_xs_TH5_floodplain.dgn

REV.	BY	DATE

I HEREBY CERTIFY THAT THIS PLAN, SPECIFICATION, OR REPORT WAS PREPARED BY ME OR UNDER MY DIRECT SUPERVISION AND THAT I AM A DULY LICENSED PROFESSIONAL ENGINEER UNDER THE LAWS OF THE STATE OF MINNESOTA.

LIC. NO. _____ DATE _____

DESIGNED
DRAWN
CHECKED

TH 5 RECONSTRUCTION

COMPENSATORY STORAGE EXHIBIT

SHEET 17 OF 17

Madelyn Creek	Storage (cu ft)	
	Existing	**Proposed**
Upstream	553	782
Downstream	N/A*	N/A*

*XPSWMM OHW and 100-yr are lower than the proposed stilling basin bottom

Grading Summary Worksheet

TH 5 Improvements

7/7/2025

Basin Location: Madelyn Creek Upstream

Condition Existing

Basin Bottom 966.52 Ft.

Storage (OHW to 100-yr) 553 $Ft.^3$

OHW 967.70

Existing 100-yr HWL 970.85

Storage Curve		
Elevation (ft.)	Surface Area (ft^2)	Cumulative Storage Volume (ft^3)
966.52	50	0
967	55	25
968	60	83
969	165	195
970	270	413
971	362	729

Grading Summary Worksheet

TH 5 Improvements

7/7/2025

Basin Location: Madelyn Creek Downstream

Condition Existing

Basin Bottom 964.82 Ft.

Storage (OHW to 100-yr) N/A Ft.^{3}

OHW 949.56

Existing 100-yr HWL 951.09

Storage Curve		
Elevation (ft.)	Surface Area (ft^2)	Cumulative Storage Volume (ft^3)
964.82	50	0
965	55	9
966	90	82
967	100	177
968	115	284

Grading Summary Worksheet

TH 5 Improvements

7/7/2025

Basin Location: Madelyn Creek Upstream

Condition Proposed

Basin Bottom	966.52	Ft.
Storage (OHW to 100-yr)	782	$Ft.^3$
OHW	967.70	
Proposed 100-yr HWL	970.05	

Storage Curve		
Elevation (ft.)	Surface Area (ft^2)	Cumulative Storage Volume (ft^3)
966.52	130	0
967	175	73
968	265	293
969	350	601
970	420	986
971	486	1,439

Grading Summary Worksheet

TH 5 Improvements

7/7/2025

Basin Location: Madelyn Creek Downstream

Condition Proposed

Basin Bottom 963.00 Ft.

Storage (OHW to 100-yr) N/A $Ft.^3$

OHW 949.56

Proposed 100-yr HWL 951.09

Storage Curve		
Elevation (ft.)	Surface Area (ft^2)	Cumulative Storage Volume (ft^3)
963	57	0
964	142	100
965	268	305
966	330	604
967	393	965
968	470	1,397

Attachment D: Wetland Impacts

Aquatic Resourse Impact Summary													Impacts by LGU Jurisdiction (ac)				
Aquatic Resource ID	Aquatic Resource Type	Type of Impact	Duration of Impact	Overall Size of Impact (ac)	Overall Size of Impact (sqft)	Size of (Fill) Impact	Size of (Cut) Impact	Overall Size of Aquatic Resource	Exisiting Plant Community	County, Major Watershed #, Bank Service Area	Incidental Status	AJD Status	MnDOT	MCWD	City of Chanhassen	U of M	MnDNR
W1A (Incidental)	Wetland	Fill	P	0.12		0.12 ac	N/A	N/A	2, 3	Carver, 20, 7	Yes	Yes	0.12				
W1B	**Wetland**	**Fill**	**P**	**0.31**		**0.31 ac**	**N/A**	**N/A**	**1, 2, 3**	**Carver, 20, 7**	**No**	**No**	**0.25**	**0.06**			
W1B	Wetland	Excavation	T (360)	0.21		N/A	N/A	N/A	1, 2, 3	Carver, 20, 7	No	No	0.14	0.07			
W1C (Incidental)	Wetland	Fill	P	0.10		0.10 ac	N/A	N/A	3	Carver, 20, 7	Yes	Yes	0.10				
W1E (Incidental)	Wetland	Fill	P		159	159 sqft	N/A	N/A	2	Carver, 20, 7	Yes	Yes		0.0037			
W1F (Incidental)	Wetland	Fill/ Cut	P	0.08		0.04 ac	0.04 ac	N/A	4	Carver, 20, 7	Yes	Yes		0.08			
W1F (Incidental)	Wetland	Excavation	T (180)*	0.01		N/A	N/A	N/A	4	Carver, 20, 7	Yes	Yes		0.01			
W3	**Wetland**	**Fill**	**P**		**55**	**55 sqft**	**N/A**	**N/A**	**6**	**Carver, 20, 7**	**No**	**Yes**		**0.0013**			
W4A (Incidental)	Wetland	Fill/ Cut	P	0.07		0.01 ac	0.06 ac	N/A	2	Carver, 20, 7	Yes	Yes	0.07				
W4B	**Wetland**	**Fill/ Cut**	**P**	**0.51**		**0.51 ac**	**N/A**	**N/A**	**2, 3**	**Carver, 20, 7**	**No**	**No**	**0.48**	**0.03**			
W4B	Wetland	Excavation	T (360)	0.03		N/A	N/A	N/A	3	Carver, 20, 7	No	No	0.001	0.027			
W4C	**Wetland**	**Fill**	**P**	**0.15**		**0.15 ac**	**N/A**	**N/A**	**2, 3**	**Carver, 20, 7**	**No**	**Yes**	**0.13**	**0.02**			
W4C (Incidental)	Wetland	Fill/ Cut	P	0.60		0.55 ac	0.05 ac	N/A	2, 3	Carver, 20, 7	Yes	Yes	0.6				
W4D (Incidental)	Wetland	Fill/ Cut	P	0.32		0.31 ac	0.01 ac	N/A	2, 3	Carver, 20, 7	Yes	Yes	0.32				
W4E (Incidental)	Wetland	Cut	P	0.04		N/A	0.04 ac	N/A	2	Carver, 20, 7	Yes	Yes	0.04				
W8	**Wetland**	**Fill**	**P**	**0.05**		**0.05 ac**	**N/A**	**N/A**	**2**	**Carver, 20, 7**	**No**	**Yes**	**0.05**				
W9	**Wetland**	**Fill/ Cut**	**P**	**0.10**		**0.06 ac**	**0.04 ac**	**N/A**	**2**	**Carver, 20, 7**	**No**	**Yes**		**0.1**			
W10 (Incidental)	Wetland	Fill	P	0.22		0.22 ac	N/A	N/A	2, 3	Carver, 20, 7	Yes	Yes	0.22				
W12A (Incidental)	Wetland	Fill/ Cut	P	0.04		42 sqft	0.04 ac	N/A	3	Carver, 20, 7	Yes	Yes		0.04			
W12B (Incidental)	Wetland	Fill	P	0.03		0.03 ac	N/A	N/A	3	Carver, 20, 7	Yes	Yes		0.03			
W12C	**Wetland**	**Fill**	**P**	**0.13**		**0.13 ac**	**N/A**	**N/A**	**2, 3**	**Carver, 20, 7**	**No**	**Yes**		**0.09**		**0.04**	
W12C	Wetland	Excavation	T (180)*	0.01		N/A	N/A	N/A	2, 3	Carver, 20, 7	No	Yes		0.01			
W12C (Incidental)	Wetland	Fill	P	0.07		0.07 ac	N/A	N/A	2, 3	Carver, 20, 7	Yes	Yes		0.07			
W12D	**Wetland**	**Fill**	**P**	**0.03**		**0.03 ac**	**N/A**	**N/A**	**3**	**Carver, 20, 7**	**No**	**Yes**		**0.03**			
W12E	**Wetland**	**Fill**	**P**	**0.06**		**0.06 ac**	**N/A**	**N/A**	**3**	**Carver, 20, 7**	**No**	**Yes**		**0.06**			
W12F	**Wetland**	**Fill**	**P**	**0.01**		**0.01 ac**	**N/A**	**N/A**	**3**	**Carver, 20, 7**	**No**	**Yes**		**0.01**			
W12G	**Wetland**	**Fill**	**P**	**0.04**		**0.04 ac**	**N/A**	**N/A**	**3**	**Carver, 20, 7**	**No**	**Yes**		**0.026**		**0.015**	
W12H (Incidental)	Wetland	Fill	P	0.03		0.03 ac	N/A	N/A	2, 3	Carver, 20, 7	Yes	Yes		0.008		0.018	
W12H (Incidental)	Wetland	Fill	T (180)*	0.02		N/A	N/A	N/A	2, 3	Carver, 20, 7	Yes	Yes				0.02	
W13A	**Wetland**	**Fill**	**P**	**0.01**		**0.01 ac**	**N/A**	**N/A**	**1**	**Carver, 20, 7**	**No**	**No**		**0.01**			
W13B (Incidental)	Wetland	Fill/ Cut	P	0.09		0.08 ac	126 sqft	N/A	3	Carver, 20, 7	Yes	Yes		0.09			
W13C (Incidental)	Wetland	Fill	P	0.03		0.03 ac	N/A	N/A	2	Carver, 20, 7	Yes	Yes	0.005	0.023			
W14A	**Wetland**	**Fill**	**P**	**0.04**		**0.03 ac**	**0.01 ac**	**N/A**	**2**	**Carver, 20, 7**	**No**	**Yes**	**0.003**			**0.034**	
W14A	Wetland	Excavation	T (180)*	0.02		N/A	N/A	N/A	2	Carver, 20, 7	No	Yes				0.02	
W14A (Incidental)	Wetland	Fill	P	0.11		0.11 ac	N/A	N/A	2	Carver, 20, 7	Yes	Yes	0.11				
W14B (Incidental)	Wetland	Fill	P	0.02		0.02 ac	N/A	N/A	2	Carver, 20, 7	Yes	Yes	0.02				
W15 (Incidental)	Wetland	Fill	P	0.12		0.12 ac	N/A	N/A	2	Carver, 20, 7	Yes	Yes	0.12				
W16A (Incidental)	Wetland	Fill/ Cut	P	0.02		0.02 ac	161 sqft	N/A	2	Carver, 20, 7	Yes	Yes	0.02				
W16B (Incidental)	Wetland	Fill/ Cut	P	0.01		136 sqft	0.01 ac	N/A	2	Carver, 20, 7	Yes	Yes	0.1				
W17A	**Wetland**	**Fill**	**P**		**57**	**57 sqft**	**N/A**	**N/A**	**2**	**Carver, 20, 7**	**No**	**No**	**0.0013**				
W17B	**Wetland**	**Fill**	**P**		**96**	**96 sqft**	**N/A**	**N/A**	**2**	**Carver, 20, 7**	**No**	**No**		**0.0022**			
W18A	**Wetland**	**Fill**	**P**	**0.15**		**0.15 ac**	**N/A**	**N/A**	**2, 3**	**Carver, 20, 7**	**No**	**No**	**0.15**			**0.004**	
W18A	Wetland	Excavation	T (180)	0.16		N/A	N/A	N/A	2, 3, 4	Carver, 20, 7	No	No	0.04			0.12	
W18B	**Wetland**	**Fill/Cut**	**P**	**1.60**		**1.52 ac**	**0.08 ac**	**N/A**	**2, 3, 4**	**Carver, 20, 7**	**No**	**No**	**1.51**			**0.04**	**0.05**
W18B	Wetland	Excavation	T (180)	0.68		N/A	N/A	N/A	2, 3, 4	Carver, 20, 7	No	No	0.31			0.32	0.07
W19A (Incidental)	Wetland	Fill	P		64	64 sqft	N/A	N/A	2	Carver, 20, 7	Yes	Yes	0.0015				
W19B (Incidental)	Wetland	Fill	P	0.02		0.02 ac	N/A	N/A	2	Carver, 20, 7	Yes	Yes	0.02				
W19C (Incidental)	Wetland	Fill	P	0.01		0.01 ac	N/A	N/A	2	Carver, 20, 7	Yes	Yes	0.01				
W19D (Incidental)	Wetland	Fill	P	0.01		0.01 ac	N/A	N/A	2, 3	Carver, 20, 7	Yes	Yes	0.01				
W20 (Incidental)	Wetland	Cut	P	0.29		N/A	0.29 ac	N/A	2, 3	Carver, 20, 7	Yes	Yes	0.29				
W21A (Incidental)	Wetland	Excavation	T (180)*	0.01		N/A	N/A	N/A	2, 5	Carver, 20, 7	Yes	Yes		0.01			
W22A	**Wetland**	**Fill**	**P**	**0.03**		**0.03 ac**	**N/A**	**N/A**	**2, 3**	**Carver, 20, 7**	**No**	**No**	**0.03**				
W22A	Wetland	Fill	T (180)	0.01		N/A	N/A	N/A	2, 3	Carver, 20, 7	No	No				0.01	
W22B	**Wetland**	**Fill**	**P**	**0.16**		**0.16 ac**	**N/A**	**N/A**	**2, 3**	**Carver, 20, 7**	**No**	**Yes**	**0.15**			**0.01**	
W22C	**Wetland**	**Fill**	**P**	**0.06**		**0.06 ac**	**N/A**	**N/A**	**2, 3**	**Carver, 33, 9**	**No**	**Yes**	**0.05**			**0.01**	
W22C	Wetland	Excavation	T (180)*	0.03		N/A	N/A	N/A	3	Carver, 33, 9	No	Yes	0.003			0.03	
W22C (Incidental)	Wetland	Fill/ Cut	P	0.04		0.03 ac	0.01 ac	N/A	2	Carver, 33, 9	Yes	Yes	0.04				
W22D	**Wetland**	**Fill/ Cut**	**P**	**0.13**		**0.12 ac**	**0.01 ac**	**N/A**	**2, 3**	**Carver, 33, 9**	**No**	**Yes**	**0.116**		**0.017**		
W22E	Wetland	Excavation	T (180)*		62	N/A	N/A	N/A	2	Carver, 20, 7	No	Yes				0.0014	
W22F	**Wetland**	**Excavation**	**P**		**57**	**57 sqft**	**N/A**	**N/A**	**2**	**Carver, 20, 7**	**No**	**Yes**				**0.0013**	
W22F	Wetland	Excavation	T (180)*	0.01		N/A	N/A	N/A	2	Carver, 20, 7	No	Yes				0.01	
W23 (Incidental)	Wetland	Fill	P	0.04		0.04 ac	N/A	N/A	2	Carver, 20, 7	Yes	Yes		0.04			
W25A (Incidental)	Wetland	Fill	P	0.01		0.01 ac	N/A	N/A	3	Carver, 20, 7	Yes	Yes	0.01				
W25B (Incidental)	Wetland	Fill	P	0.18		0.18 ac	N/A	N/A	2	Carver, 20, 7	Yes	Yes	0.18				
W25C (Incidental)	Wetland	Fill/ Cut	P	0.18		0.18 ac	70 sqft	N/A	2	Carver, 20, 7	Yes	Yes	0.18				
W25D (Incidental)	Wetland	Fill	P	0.07		0.07 ac	N/A	N/A	2, 3	Carver, 20, 7	Yes	Yes	0.07				
W25E (Incidental)	Wetland	Fill	P	0.01		0.01 ac	N/A	N/A	2	Carver, 20, 7	Yes	Yes	0.01				
W26 (Incidental)	Wetland	Fill	P	0.07		0.07 ac	N/A	N/A	2	Carver, 33, 9	Yes	Yes	0.07				
W27	**Wetland**	**Fill**	**P**	**0.02**		**19 sqft**	**0.02 ac**	**N/A**	**1**	**Carver, 20, 7**	**No**	**No**		**0.02**			
W29A	**Wetland**	**Cut**	**P**	**0.68**		**N/A**	**0.68 ac**	**N/A**	**1, 3**	**Carver, 20, 7**	**No**	**No**	**0.64**				**0.04**
W29B	**Wetland**	**Cut**	**P**	**0.48**		**N/A**	**0.48 ac**	**N/A**	**2, 3**	**Carver, 20, 7**	**No**	**No**	**0.66**				**0.02**
W31A (Incidental)	Wetland	Fill	P		96	96 sqft	N/A	N/A	3	Carver, 20, 7	Yes	Yes	0.002				
W31B	**Wetland**	**Fill**	**P**		**225**	**225 sqft**	**N/A**	**N/A**	**3**	**Carver, 20, 7**	**No**	**No**	**0.005**				
W31C (Incidental)	Wetland	Fill/ Cut	P	0.11		0.10 ac	0.01 ac	N/A	2	Carver, 20, 7	Yes	Yes	0.11				
W31D	**Wetland**	**Fill**	**P**	**0.02**		**0.02 ac**	**N/A**	**N/A**	**2**	**Carver, 20, 7**	**No**	**No**	**0.012**			**0.004**	
W31D	Wetland	Excavation	T (180)	0.02		N/A	N/A	N/A	2	Carver, 20, 7	No	No				0.02	
W33A	**Wetland**	**Fill/ Cut**	**P**	**0.13**		**0.04 ac**	**0.09 ac**	**N/A**	**2**	**Carver, 33, 9**	**No**	**Yes**	**0.12**			**0.01**	
W33B (Incidental)	Wetland	Fill	P	0.37		0.08 ac	0.29 ac	N/A	2, 3	Carver, 33, 9	Yes	Yes	0.367			0.004	
W33C	**Wetland**	**Fill/ Cut**	**P**	**0.44**		**0.19 ac**	**0.25 ac**	**N/A**	**2, 3**	**Carver, 33, 9**	**No**	**Yes**	**0.37**		**0.07**		
W33C	Wetland	Excavation	T (180)*	0.14		N/A	N/A	N/A	2, 3	Carver, 33, 9	No	Yes	0.02		0.12		
W33D	**Wetland**	**Cut**	**P**		**33**	**33 sqft**	**N/A**	**N/A**	**3**	**Carver, 33, 9**	**No**	**Yes**	**0.001**				
W35	**Wetland**	**Cut**	**P**	**0.04**		**0.04 ac**	**N/A**	**N/A**	**3, 5**	**Carver, 33, 9**	**No**	**No**	**0.001**		**0.04**		
W37	Wetland	Fill/ Cut	P	0.01		0.01 ac	134 sqft	N/A	2, 3	Carver, 20, 7	No	No	0.007		0.003		
W38	**Wetland**	**Fill**	**P**	**0.01**		**0.01 ac**	**N/A**	**N/A**	**2**	**Carver, 20, 7**	**No**	**No**		**0.005**		**0.007**	
W41 (Incidental)	Wetland	Fill	P	0.07		0.07 ac	N/A	N/A	3	Carver, 33, 9	Yes	Yes	0.07				
W42 (Incidental)	Wetland	Fill	P		121	121 sqft	N/A	N/A	2	Carver, 33, 9	Yes	Yes	0.003				
Unnamed Stream 1	Tributary	Fill	P	17 LF (183 sqft)		N/A	N/A	N/A	N/A	Carver, 20, 7	N/A	N/A					
Unnamed Stream 2	Tributary	Fill	P	73 LF (197 sqft)		N/A	N/A	N/A	N/A	Carver, 20, 7	N/A	N/A					
Ditch 1	Tributary	Fill	P	37 LF (314 sqft)		N/A	N/A	N/A	N/A	Carver, 20, 7	N/A	N/A					
Ditch 1	Tributary	Excavation	T (180)	35 LF (263 sqft)		N/A	N/A	N/A	N/A	Carver, 20, 7	N/A	N/A					

Total Permanent Jurisdictional WCA Impacts	**5.61**
Total Temporary Jurisdictional WCA Impacts	1.32
Total Permanent Jurisdictional USACE Impacts (including tributaries)	**4.27**
Total Temporary Jurisdictional USACE Impacts (including tributaries)	1.12

*Temporary impacts will be in place up to 180 days both 2026 and 2027.

	MnDOT	MCWD	City of Chanhassen	University of Minnesota	Minnewashta below OHWL - MnDOT ROW
WCA Jurisdictional Permanent Impacts*	**4.74**	**0.46**	**0.13**	**0.18**	**0.11**

*Splitting impacts by jurisdiction resulted in impacts below 0.01 (thousand place) which is causing a rounding difference. Totalling the permanent impacts by jurisdiction results in a slight difference compared to the overall total (0.004)

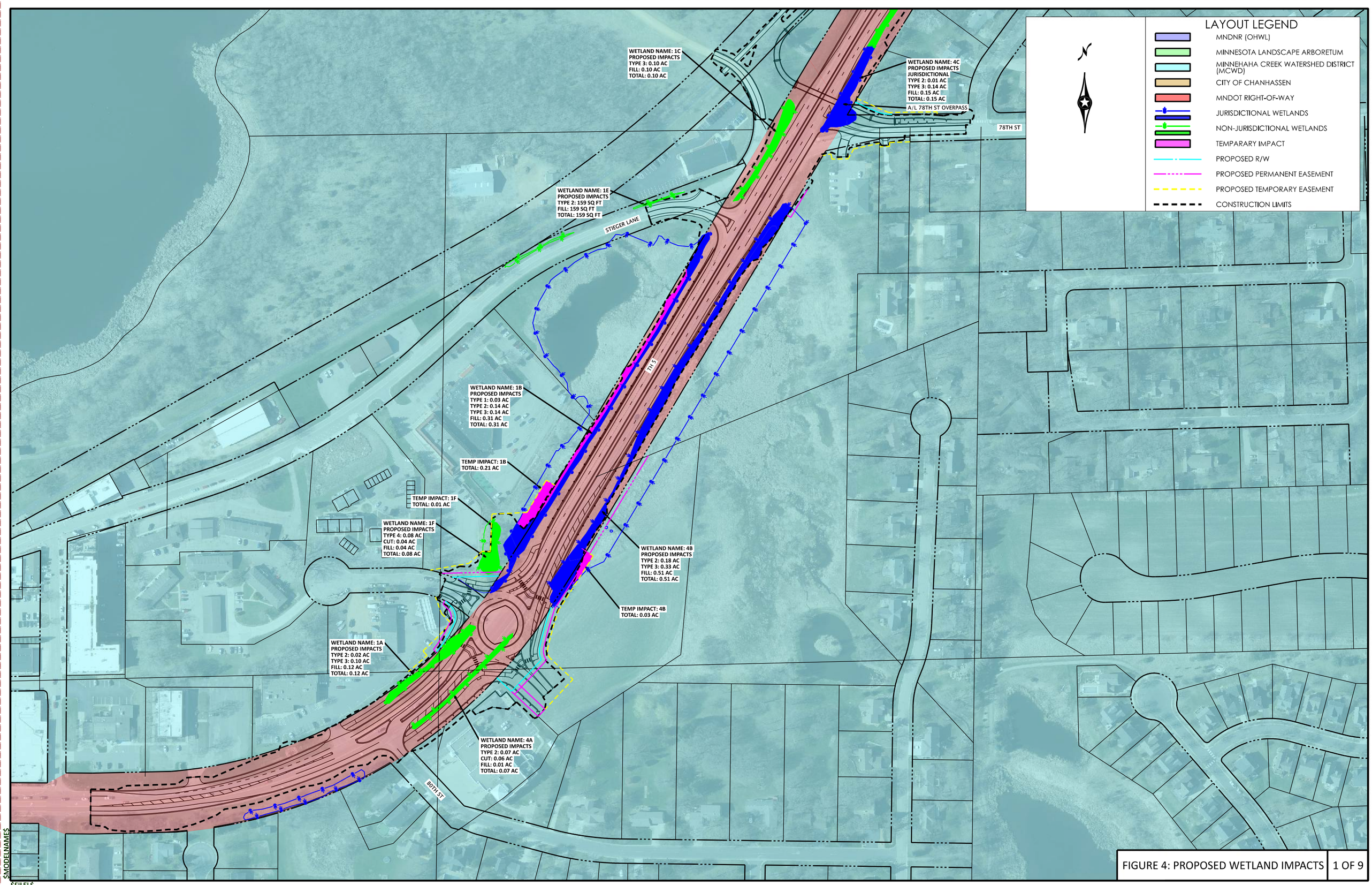

FIGURE 4: PROPOSED WETLAND IMPACTS | 1 OF 9

$MODELNAME$

$FILEL$

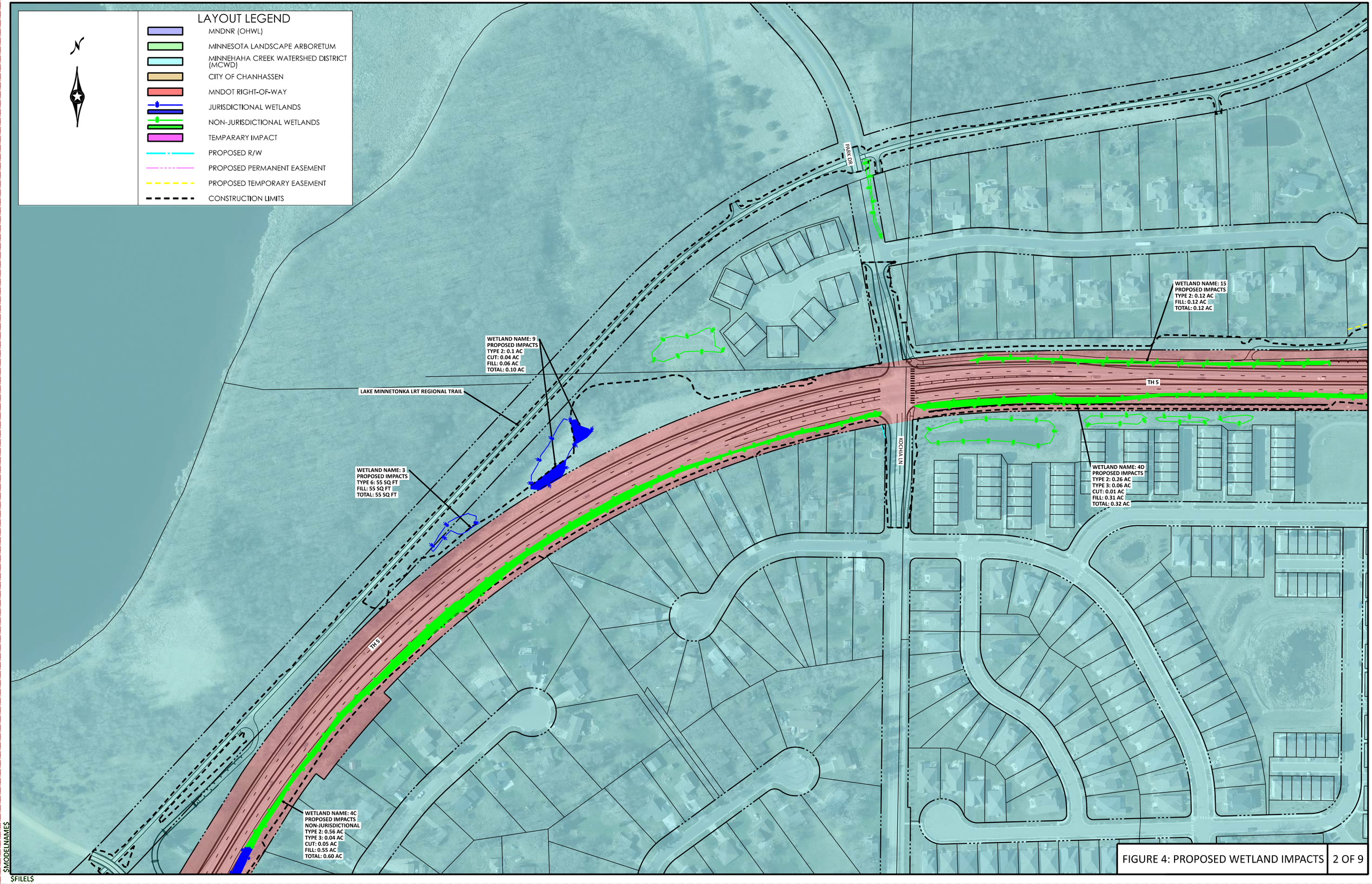

FIGURE 4: PROPOSED WETLAND IMPACTS | 2 OF 9

$MODELNAME$

$FILEL$

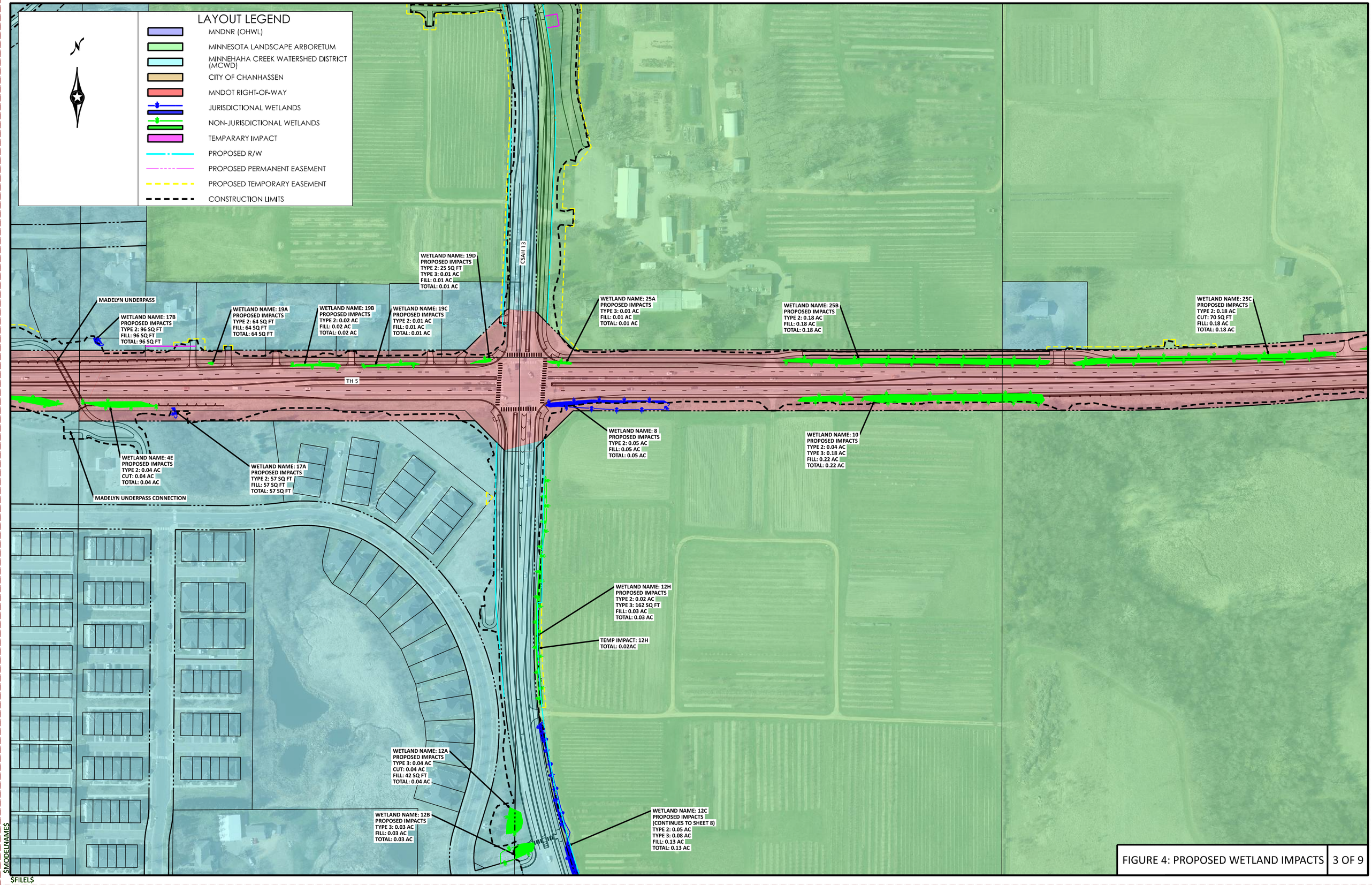

FIGURE 4: PROPOSED WETLAND IMPACTS | 3 OF 9

$MODELNAME$

$FILEL$

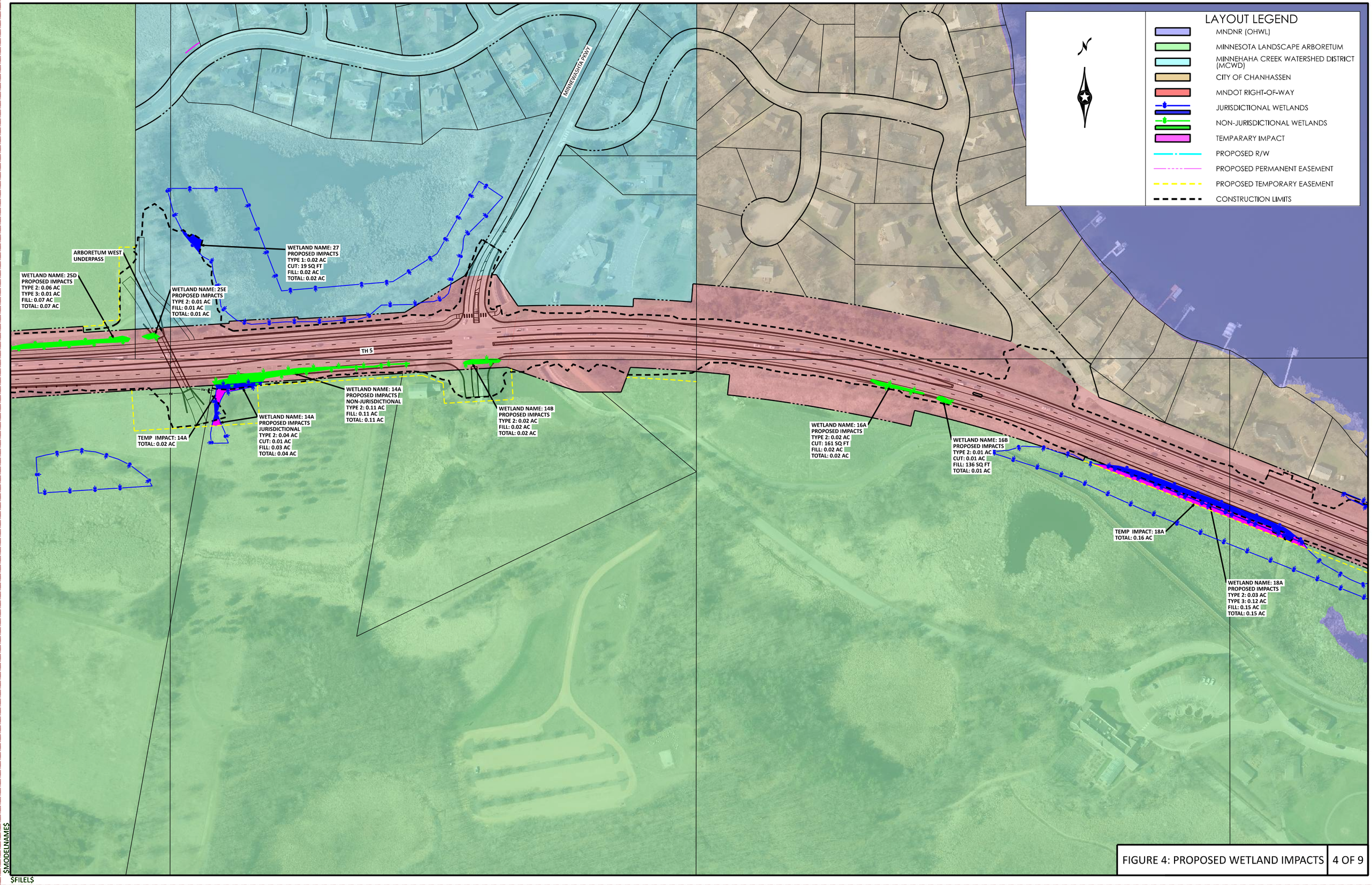

FIGURE 4: PROPOSED WETLAND IMPACTS

$MODELNAME$

$FILEL$

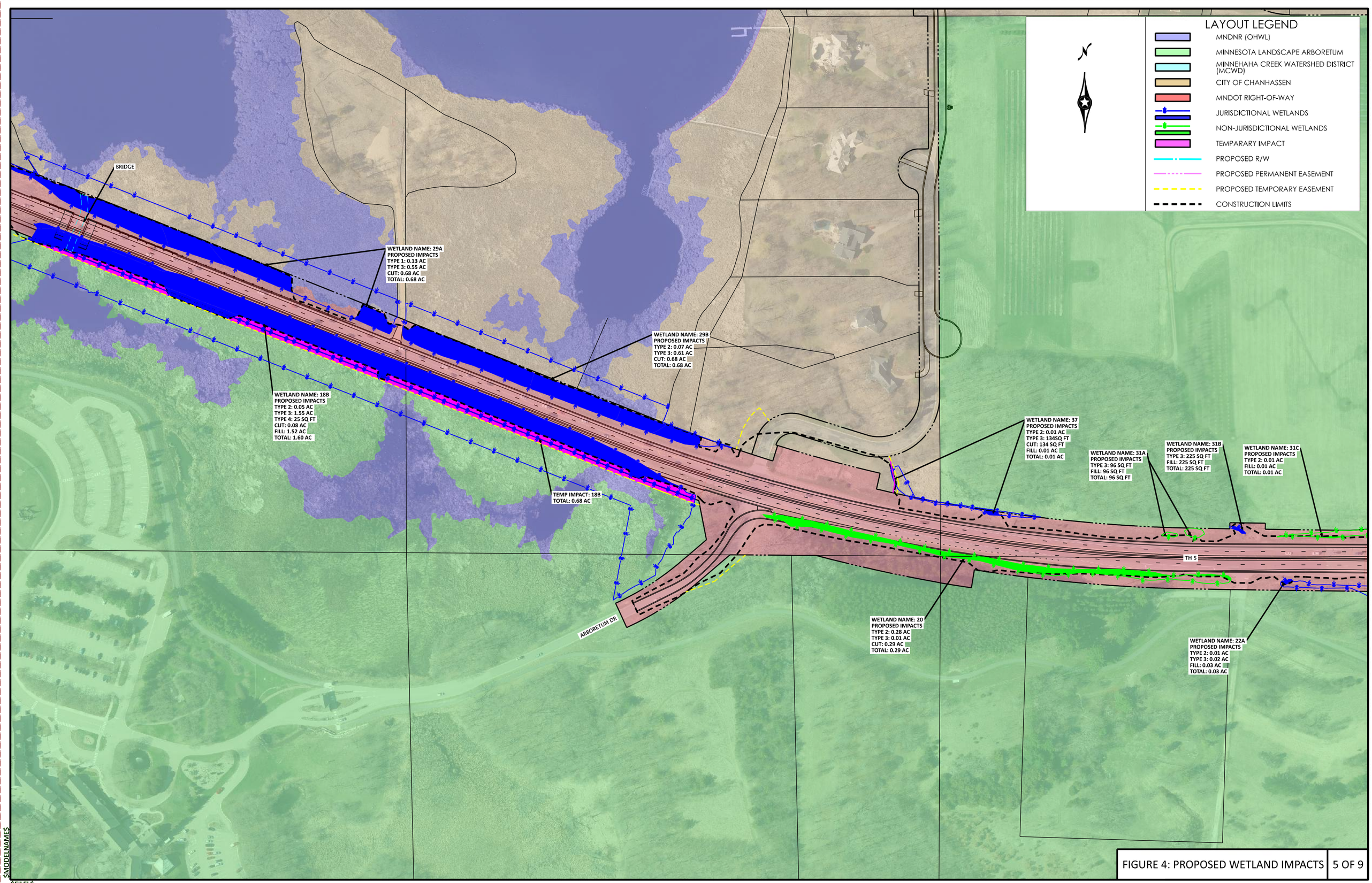

FIGURE 4: PROPOSED WETLAND IMPACTS

$MODELNAME$

$FILEL$

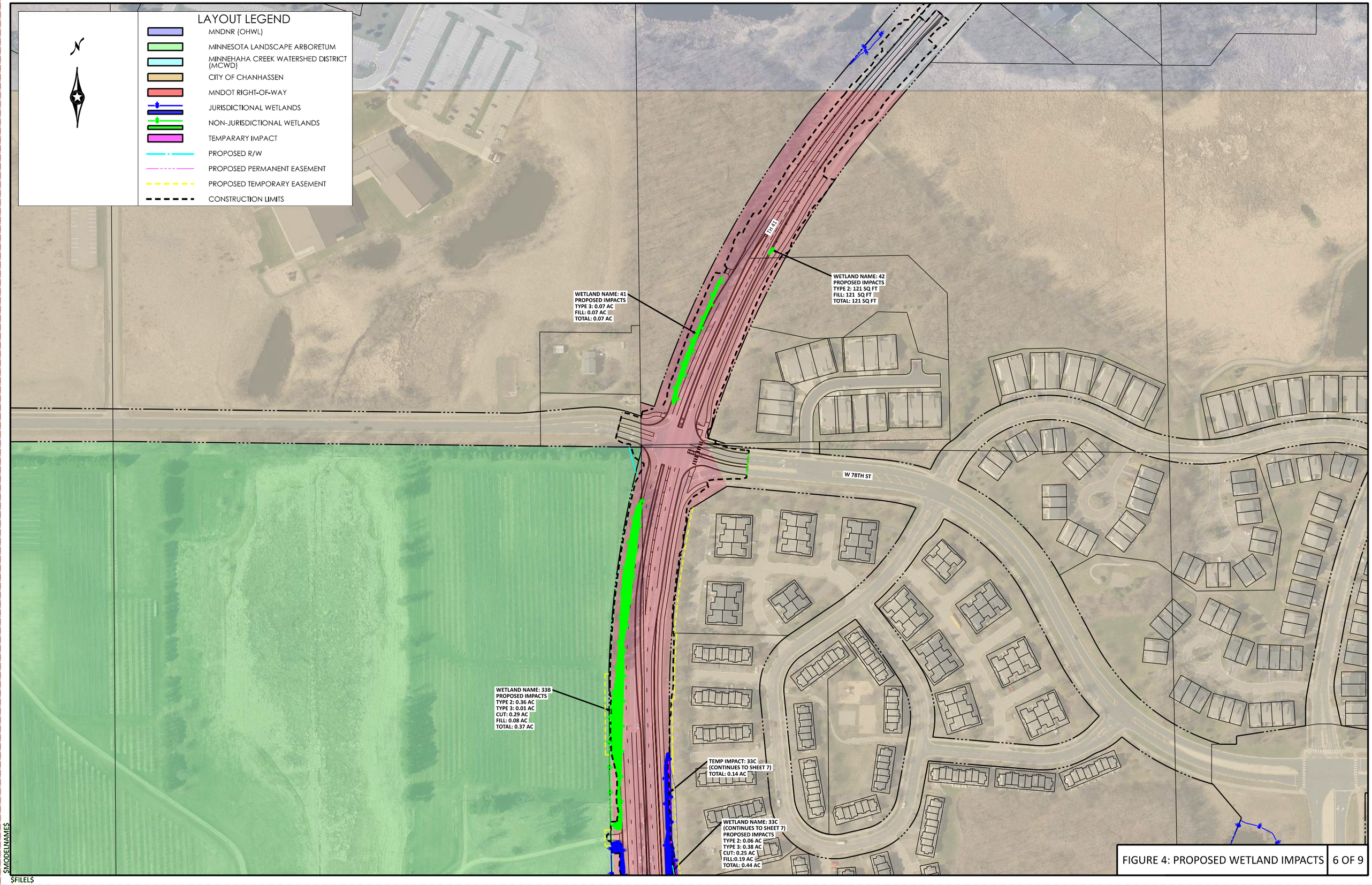

FIGURE 4: PROPOSED WETLAND IMPACTS

$MODELNAME$

$FILEL$

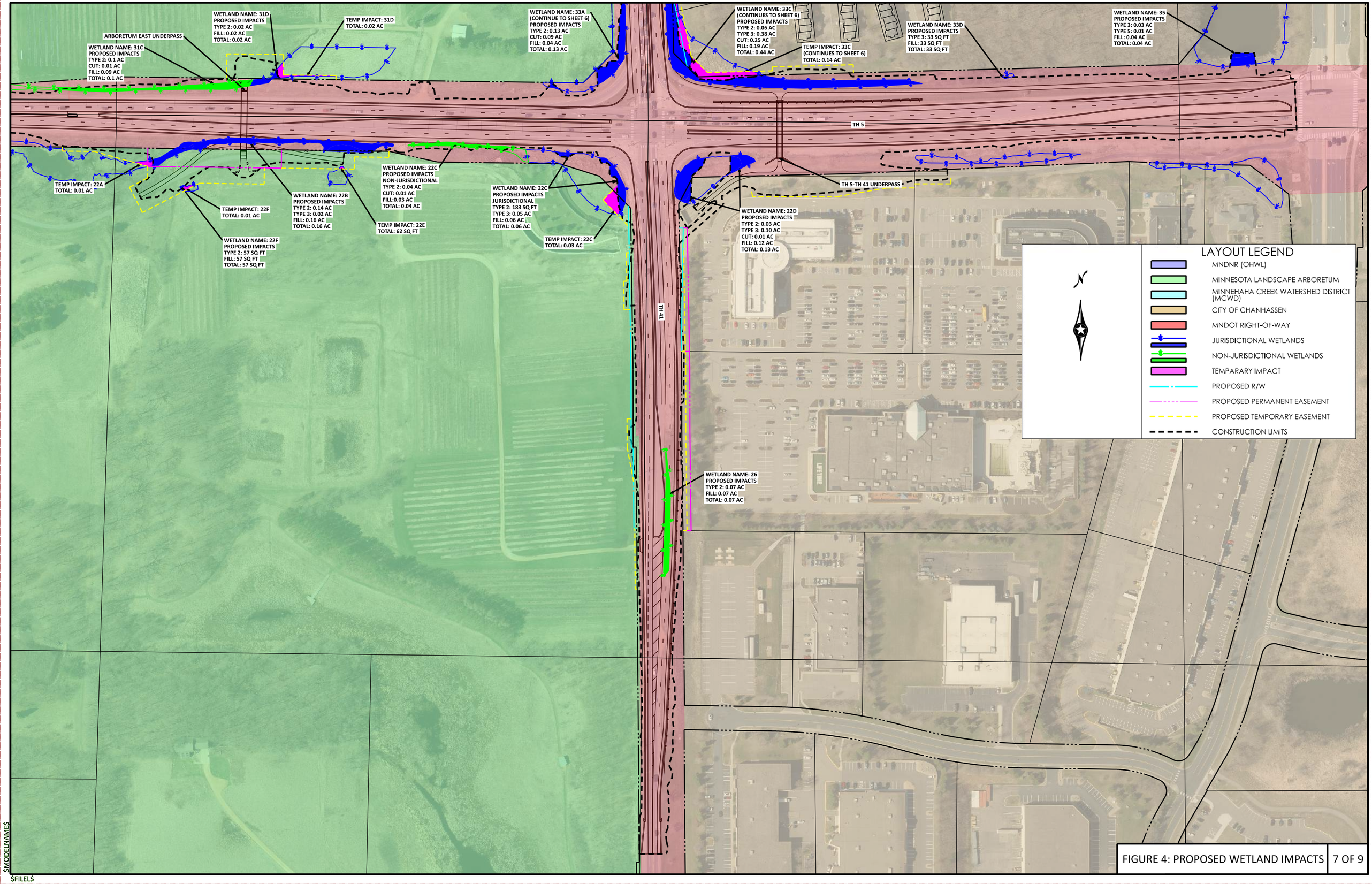

FIGURE 4: PROPOSED WETLAND IMPACTS | 7 OF 9

$MODELNAME$

$FILEL$

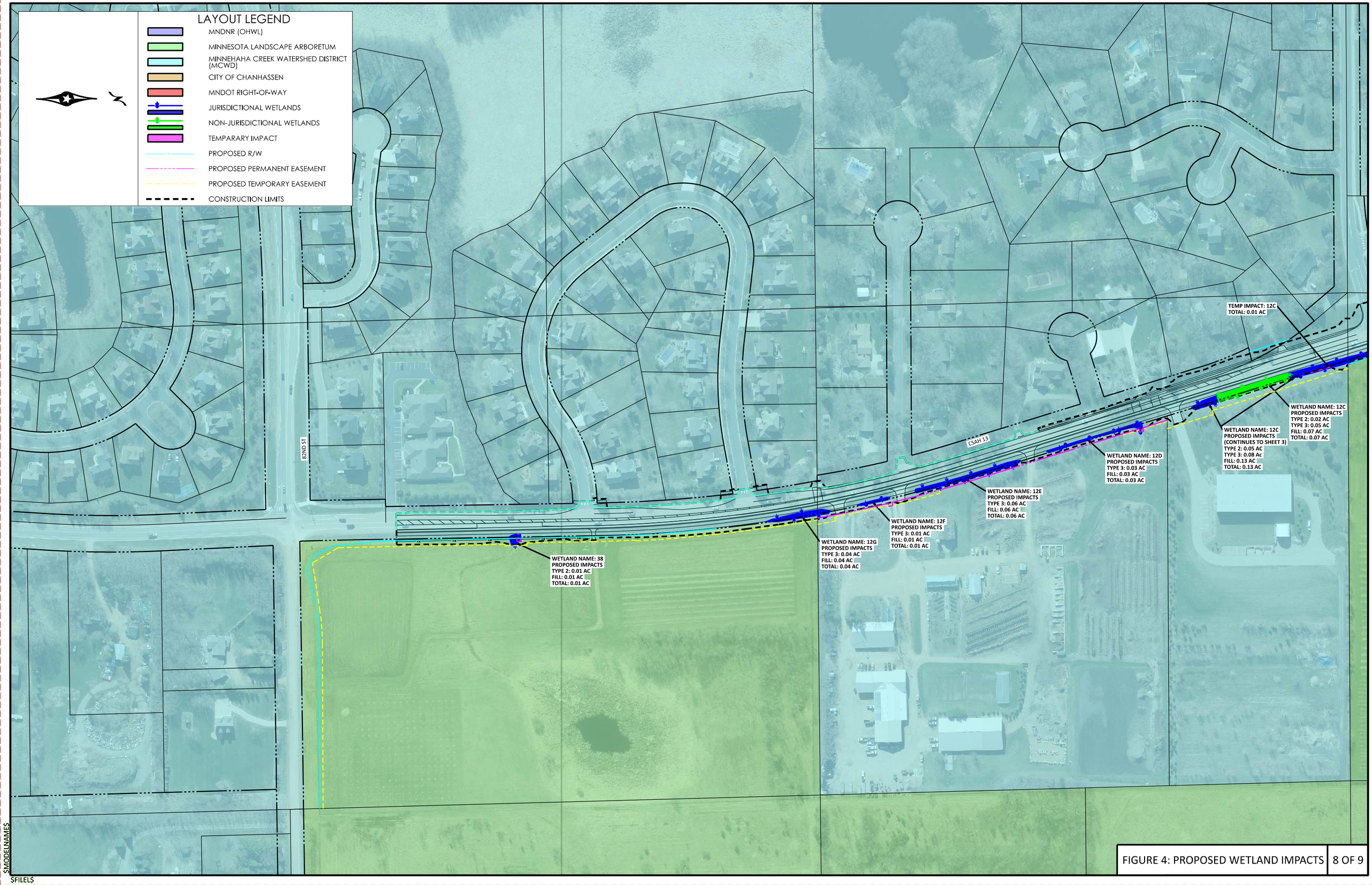

FIGURE 4: PROPOSED WETLAND IMPACTS

$MODELNAME$

$FILEL$

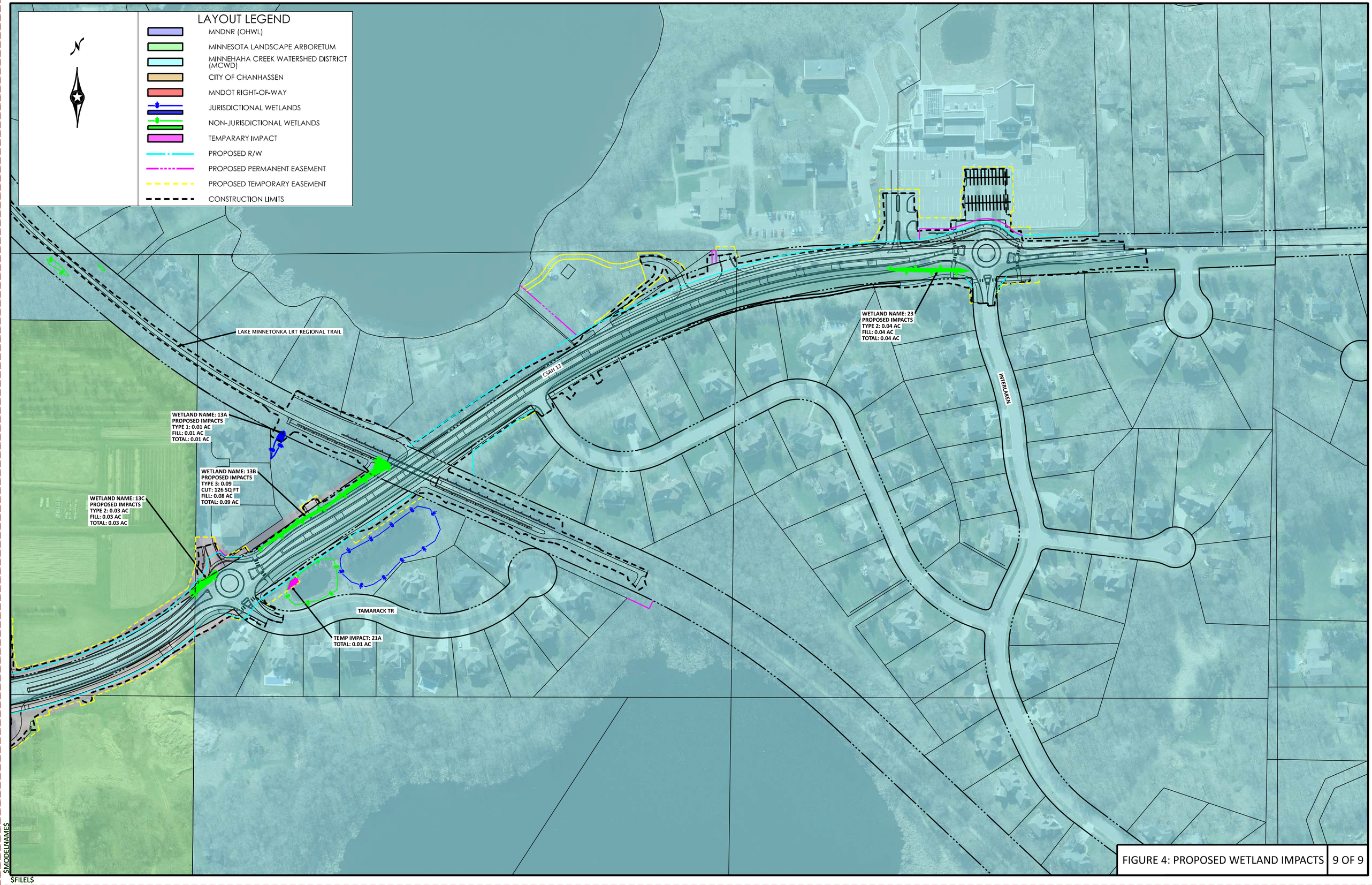

FIGURE 4: PROPOSED WETLAND IMPACTS

$MODELNAME$

$FILEL$

Attachment E: Public Comments

Public Comments

Lucas Guimont

Will storm water run off be collected under the newly built trails that are being added along Bavaria Rd from 87th to 82nd street? Currently the rain water flows off Bavaria Rd into ditches and is not collected into curb storm drains.

Can we consider adding curbs and drains on BOTH sides of Bavaria rd to collect this water run off and into stormwater pipes running under the newly added trails when resurfacing Bavaria? Can you also consider adding surface bee hive drains on the east side along Bavaria rd to collect any water run off from the arboretum and hartmans landscaping place since the surrounding soil drains toward Bavaria rd adding to the already high water table.

The applewood neighborhood currently has a city culvert pipe that storm water flows from Bavaria Rd. down the backyards and this road water runoff adds to an already wet/soggy neighborhood with active sump pumps especially in a wet rain year like this summer of 2025. I know the clay soils don't help but we don't need to be adding more water to what ends up being a temporary river flowing down the applewood hillside which is already a wet area.

I find it odd that a neighborhood has to deal with surface water run off from roads that is directed to our backyards where kids play in the back and rarely drys out between rain. In response, neighbors have had to pay to add french drains along the back of our yards along the entire hill to help alleviate the road run off and allow the backyard to dry out sooner. I appreciate your consideration of this proposal. The neighbors of Applewood neighborhood will thank you for helping improve the storm water handling and the modernization of Bavaria Road. Thank you!

Thomas Katalinch

I fully support this project. The volume of traffic that has grown at the Highway 5 and Bavaria Road intersection since we moved here in 2006 has been incredible. My interest is to ensure the detours necessary to get this done are respectful of us who are right in the middle of it. Thank you.

Shannon Hargrove

Please consider our comments on the proposed Highway 5 Improvements Project (Project) located in Carver County. These comments are being provided in response to the Public Notice (Permit# 24-580) regarding Carver County's application for a Minnehaha Creek Watershed District (MCWD) Permit. We live within the MCWD's notification corridor and appreciate receiving the post-card informing us of the public comment period.

We live in the Tristan Heights development located near Minnewashta Parkway and Highway 5. Our residence will be directly affected by construction, including such effects as increased noise and fugitive

dust, the removal of vegetation that serves as a visual buffer between our residence and the existing highway, noise related to increased future traffic, road closures, and diverted traffic during construction. We are also users of the neighborhood park and trail located within view of our residence that will be impacted by construction of a stormwater pond and a proposed vehicle underpass that will connect the University of Minnesota's Arboretum (Arboretum) and Lake Tamarack Properties. These features are to be located west of Minnewashta Parkway on north side of the highway (see sheet 164 of 729 of the County's Plans).

We do not believe that the underpass and stormwater pond as proposed are consistent with the City of Victoria's comprehensive plan due to its designation as a neighborhood park. The park is identified in Figure 7.1 titled "Existing Parks and Trails" of the City of Victoria's Comprehensive Plan. We note that the MCWD in their management plan also identifies the location of the proposed underpass and stormwater pond as Park/Open Space.

Close review of the Project's proposed stormwater design demonstrates that no stormwater treatment facilities are proposed on Arboretum-owned properties even though their properties comprise well in excess of half of the Project's border with landowners. This means that the placement of stormwater facilities is disproportionately on non-Arboretum-owned property. We have discussed this with Project staff and were told that the Arboretum would not accommodate highway stormwater infrastructure on their property and further stated that eminent domain is not available as an option to secure county highway easements on Arboretum property.

Use of a neighborhood park as a stormwater pond is poor planning, however, due to the topography that the Project crosses between Minnewashta Parkway and Rolling Acres Road, its apparent that stormwater will also be diverted from Lake Minnewashta to Tamarack Lake due to the careless placement of the proposed stormwater pond. Based on the natural topography most of the stormwater associated with this segment of highway should flow towards Lake Minnewashta, however, based on the County's stormwater design this water will now be redirected towards Tamarack Lake. The stormwater pond as designed would likely divert additional stormwater from several thousand feet of the expanded Highway to Tamarack Lake. These areas are identified as subwatersheds LV-1 and LMC-4 in the MCWD Plan.

Tamarack Lake is a sensitive feature and until recently was identified as impaired on the Minnesota Pollution Control Agency (MPCA) 303(d) list. It is unknown how much stormwater would be diverted into the lake based on the current design or if the wetland that feeds the lake or the channelized creek that discharges from the creek could handle the increased stormflows. No discussion of the water diversion's potential impact on Lake Minnewashta was included in the Environmental Assessment (EA) or Environmental Worksheet (EAW) prepared for the Project. The impacts on the watersheds could be significant especially given the abundance of sensitive environments including those that support endangered species act-listed species that surround the Project. The Project has stated in their response to comments on the EA/EAW that lake levels within Lake Minnewashta would not be affected but they did not analyze the effects the diverted stormwater would have on the wetlands and small creek that currently convey this water through the Arboretum (through subwatershed LMC-4) to the lake.

The State of Minnesota of has invested over $4,000,000 (through a combination of land purchases and Minnesota Legacy grants) into the immediate watershed of Tamarack Lake which allowed the area to be restored and ultimately removed from the Minnesota's 303(d) list. The Arboretum's unwillingness to place stormwater ponds on their own property is inconsistent with established engineering principles, will increase the peak runoff rate within the subwatershed, threatens the water quality in the lake, and disregards the considerable tax payer dollars that have been spent to restore the lake's watershed.

We urge the MCWD to deny the placement of the stormwater pond as proposed by the County as it is inconsistent with the MCWD Stormwater Management Rule which states that stormwater runoff volume must be "managed to promote the health of native and designed plant communities" and improve the physical, chemical, and ecological health of surface waters" within the watershed. Diverting water between watersheds through careless placement of stormwater infrastructure does neither. The MCWD board must act to ensure that the previous state's investments are not comprised due to the Arboretum's unwillingness to place stormwater infrastructure on their property.

Zach Meuller

Don't close this all at the same time. We are frustrated with the endless detours already. Do this project in stages, preferably starting with rolling acres.

Michael Breitling (note: this comment was received after the comment period ended)

I live on Applewood Circle in Victoria, a neighborhood off of Bavaria Road. I am requesting that curbs and storm drains be considered for Bavaria Road during the upcoming construction project .

Currently, much of the rainwater collected in the ditch off of Bavaria Road flows through a collection point on the east end of our neighborhood. That water is then drained through the backyards of many houses causing flooding issues.

Thank you for your consideration.

Attachment F: Figures

Table 1: Impervious Area Summary

	IMPERVIOUS (AC)			
	EXISTING	PROPOSED		
		NEW	RECONSTRUCTED	TOTAL
TOTAL	46.7	12.9	46.7	59.6

Table 2: Required Treatment Volume

	REQUIRED TREATMENT VOLUME (AC-FT)	
	ADDED IMPERVIOUS	NEW/RECONSTRUCTED
TOTAL	1.06	2.48

Table 4: Stormwater BMP Pretreatment

Stormwater BMP	BMP Type	Pretreatment
Trillium	Filtration	SAFL Baffle
Buckbean	Infiltration	Forebay
Blazing Star	Filtration	Forebay
Pipe Gallery A	Underground	SAFL Baffle
Pipe Gallery B	Underground	SAFL Baffle
Butterfly Weed	Filtration	SAFL Baffle
Lady Slipper	Filtration	SAFL Baffle
Bog Aster	Infiltration	SAFL Baffle/Forebay
CSAH 13 Biofiltration Ditch	Filtration	Vegetated Filter Strip

Table 5: Filtration/Infiltration Basin Drawdown

Filtration / Infiltration Basin Drawdown Summary				
Stormwater BMP	Filter Media Surface Area	Design Infiltration Rate	Water Quality Volume	Drawdown
	(sf)	(in/hr)	(cf)	(hr)
Trillium	5462	1.0	14318	31.5
Buckbean	7420	0.8	19565	39.5
Blazing Star	12637	1.0	28148	26.7
Butterfly Weed	5020	1.0	16027	38.3
Lady Slipper	2604	1.0	6872	31.7
Bog Aster	16257	0.8	27270	25.2
CSAH 13 Biofiltration Ditch*	200	1.0	789	47.3
*2' wide ditch with 100' long filter media section				

Table 6: Discharge Rates

Location	Existing (cfs)			Proposed (cfs)		
	2-yr	10-yr	100-yr	2-yr	10-yr	100-yr
TH 5						
5-A	8.7	10.4	10.9	7.8	10.4	10.9
5-B	19.7	42.5	63.9	12.2	30.4	55.5
5-C	6.2	16.9	37.9	5.5	15.1	37.5
5-D	42.4	100.2	243.9	29.4	80.9	220.7
5-E	41.6	100.4	216.5	31.0	82.9	215.1
5-F	5.0	6.8	10.1	4.8	6.7	9.5
CSAH 13 (Rolling Acres/Bavaria)						
13-A	48.4	99.6	238.1	46.5	98.8	223.7
13-B	7.5	11.0	14.8	7.2	10.6	14.2
13-C	3.4	6.9	18.9	2.6	6.7	18.2
13-D	10.7	18.8	23.6	9.8	15.5	15.9
13-E	22.8	46.5	98.8	18.3	34.5	92.1
13-F	1.6	3.8	9.4	0.6	1.5	4.4
TH 41						
41-A	3.6	5.9	10.9	1.8	3.8	8.7
41-B	0.6	3.9	16.1	0.6	3.0	11.7
41-C	18.1	64.4	210.9	17.2	61.8	206.3
41-D	2.0	5.2	13.7	1.9	4.8	12.3

Table 7: Impacts to Downgradient Waterbodies

Impacts to Downgradient Waterbodies											
Waterbody	Management Class	Waterbody Surface Area (ac)	Total Volume (ac-ft)						Bounce (ft)		
			Existing			Proposed					
			2-yr	10-yr	100-yr	2-yr	10-yr	100-yr	2-yr	10-yr	100-yr
Wetland (between Steiger Lake Ln & TH 5)	Manage 2 Wetland	2.0	10.4	19.3	37.0	9.9	18.6	36.8	**0.00**	**0.00**	**0.00**
Steiger Lake	Lake	165.9	13.4	25.3	46.7	12.3	23.5	46.2	**0.00**	**0.00**	**0.00**
Schutz Lake	Lake	106.4	4.4	8.9	20.0	4.4	8.7	19.3	**0.00**	**0.00**	**0.00**
Wetland (northwest corner of Minnewashta Pkwy & TH 5)	Manage 1 Wetland	5.6	3.0	6.6	16.5	3.1	7.0	17.4	**0.02**	**0.06**	**0.17**
Lake Minnewashta	Lake	679.7	9.1	19.9	50.7	8.2	19.1	49.8	**0.00**	**0.00**	**0.00**
Wetland (northwest corner of 82nd St & TH 41)	Preserve Wetland	7.5	2.0	5.5	16.0	1.9	5.2	15.5	**0.00**	**0.00**	**0.00**
Tamarack Lake	Lake	28.3	0.1	0.3	0.6	0.1	0.2	0.5	**0.00**	**0.00**	**0.00**
Wetland (west of TH 41 & south of Tanadoona)	Wetland	2.0	0.1	0.3	1.1	0.1	0.3	1.1	**0.01**	**0.01**	**0.01**